Equipment Request for Proposal

From:	**Ben Stevens, CFO**
	stevensb@winmedical.org
Date:	**3/15/2024**
Project Name:	**WinnMed Expansion & Renovation**
RFP Due Date:	**4/10/2024 12:00 PM**
Questions & RFP Responses Sent To:	**Ben Stevens, stevensb@winmedical.org**

WinnMed is seeking bids for the Expansion & Renovation project which entails equipment for OB, Surgery, and Clinical departments. Attached are the specifications and plans pertaining to this request.

Interested vendors should complete the information on the respective bid form. There are three bid packages included in this project. Bid Package A and Bid Package B will each have one awardee while Bid Package C may have multiple awardees. All freight, delivery and installation of products need to be included in each separate bid package while also be shown on the bid form. Note that the owner will provide contractors to hook up items requiring licensed individuals (i.e. electrical, plumbing, HVAC). The Owner reserves the right to add or delete items based upon unit pricing. This request for proposal is for final pricing. Unit prices shall cover any price increases anticipated at time of purchase and shall be held for 45 days from bid due date.

Bid Submittal to include:

- Equipment Specifications
- Bid Forms A, B, C
- Freight, Delivery, and Installation charges
- History and Description of Dealer's Firm
- References
- Certificate of Insurance will be requested once awards are provided

Schedule of the project is as follows:

- Bids reviewed on April 10, 2024 by owner. Recommendation to the Board of trustee will occur at the next board meeting which are scheduled the first Wednesday of each month. Purchase orders will be processed within one week of the Board of Trustee approval.
- Anticipated Furniture Delivery/Installation Date(s):
    - Bid Package A: Quarter 4 2025
    - Bid Package B: Quarter 4 2025

  - Bid Package C: multiple dates to be coordinated upon issuance of Purchase Order
- Questions regarding building access or pre-installation walk-throughs and installation updates shall be addressed to Graham Construction (Construction Manager) or Ben Stevens from WinnMed.

Equipment shall be delivered and installed to the job site. Equipment vendor(s) are responsible for the proper placement (based on equipment plans and specifications) and removal and disposal of all cartons, packaging, and debris from the job site(s).

Any equipment delivered damaged, defective, dirty, or scratched will be the responsibility of the vendor for repair or replacement as soon as possible. Notification regarding damage, defects, etc. will be addressed on a punch list immediately following the installation.

WinnMed

Bid Form
Package A

Date:	3/22/2024
District:	Winneshiek Medical Center
	901 Montgomery Street
Contact Name:	Ben Stevens-Chief Financial Officer
Contact Number:	(563) 387-3109

Bid Item #	Specified Vendor	Item Description	Specified Model #	Per Spec /Substitute	Bidding Vendor	Model #	Description	Quantity	Unit Price	Total Price
1.A	Steris	Cart Washer/Utensil Washer & Disinfector; Exterior Panels	FW12102					1		
2.A	Steris	Triple Bay Reprocessing Sink; 120"; Height Adjustable; Chemistry Mount, Flex Plate; External Drain Lever Handles	SINK50120					1		
3.A	Steris	InnoWave ProSonic Irrigator; 60 Lumens	IWPRO60					1		
4.A	Steris	Rack Washer/Disinfector; Three level manifold rack (Total Qty 4), auto docking transfer card adapter (Total Qty 4)	FH19042					2		
5.A	Steris	Auto Docking Transfer Cart	FD179					4		
6.A	Steris	Work Table; 36" x 72"; Height Adjustable	CG5					2		
7.A	Steris	Drying Cabinet, Pass Through, Trim Kit	DCR101101XL					1		
8.A	Steris	Prep & Pack Table, Deluxe Accessory Package, Height Adjustable; Task Drawer, Magnification Light	PREP63					1		
9.A	Steris	V-Pro Max 2 Sterilizer; Electric; VAPROX HC Sterilant; Thermal Paper Roll; 5 Test Packs	VP500002101					1		
10.A	Steris	600 Prevac Steam Sterilizer; Single Door, 480V; Drain Kit, Chamber Rail	EF1301242					2		
11.A	Steris	Transfer Carriage, Fixed Height; Loading Car w/ 2 Shelves	AY1598104 AY1596604					4		
12.A	Steris	Case Cart; 28.6x47,3x39; Stainless Steel; 2 Wire Adjustments per Cart	ACC243739					6		
13.A	Steris	Cart Washer Universal Rack	FD372					1		
14.A	Steris	System Rail - 38"	T635Q0					2		
18.A	Steris	400 16x16x26 Prevacuum Single Sliding Sterilizer; Electric	SR0101110311					1		
19.A	Steris	Triple Bay Reprocessing Sink; 97.5"; Height Adjustable; Chemistry Mount, Flex Plate	SINK5097					1		
20.A	Steris	Pass-Thru Automated Endoscope Reprocessor	ADVPT3008					2		
21.A	Steris	Endoscope Drying and Storage System	DRY1001					4		
22.A		Bid Package A Delivery & Installation						1		

TOTAL

COMPANY: _____ ADDRESS: _____

PHONE: _____ FAX: _____

NAME: _____ TITLE: _____

SIGNATURE: _____ DATE: _____

ADDITIONAL INFORMATION: _____

WinnMed

Bid Form
Package B

Date:	3/22/2024
District:	Winneshiek Medical Center
	901 Montgomery Street
Contact Name:	Ben Stevens-Chief Financial Officer
Contact Number:	(563) 387-3109

Bid Item #	Specified Vendor	Item Description	Specified Model #	Per Spec /Substitute	Bidding Vendor	Model #	Description	Quantity	Unit Price	Total Price
24.B	Stryker	Ceiling Mounted Surgical Light; Endoscopic Room; Wall Control Display; Sterile Control & Light Handle; Sterile Control Prep; 2 Arm; Qty 1 Monitor	RD 2207					2		
25.B	Stryker	Ceiling Mounted Equipment Management System; 3 Row, 4 Shelves; Foot Pedal Storage Drawer	SPS-3-C					2		
26.B	Stryker	Ceiling Mounted Anesthesia Boom; 2 Row, 2 Arm, 1 Air, 2 Vac, 1 N2O Gas, 2 O2, 1 WAGD Gas	SFS-2					2		
27.B	Stryker	Endoscopic Room Ancillary Parts; DVI Monitor Ports (Total 6); Cable Assembly; Fiber Optic; DVI Plate; BNC Plate and Cable						2		
28.B	Stryker	OR 1 Surgical Light w/ Monitor; 2 Arm; Handle Integrated Camera; Wall Control Display; Sterile Control Prep & Light Handle	FD 2203					1		
29.B	Stryker	OR 1 Surgical Light w/ Monitor; 2 Arm; Sterile Control Prep & Light Handle	FD 2203					1		
30.B	Stryker	OR 1 Ceiling Mounted Anesthesia Boom; 2 Row, 2 Arm, 1 Air, 2 Vac, 1 N2O Gas, 2 O2, 1 WAGD Gas	SFS-2					1		
31.B	Stryker	OR 1 Ceiling Mounted Equipment Management System; 3 Row, 4 Shelves; Foot Pedal Storage Drawer	SPS-3-C					1		
32.B	Stryker	OR 3 Ceiling Mounted Equipment Management System; 3 Row, 4 Shelves; Foot Pedal Storage Drawer	SPS-3-C					1		
33.B	Stryker	OR 4 Ceiling Mounted Equipment Management System; 3 Row, 4 Shelves; Foot Pedal Storage Drawer	SPS-3-C					1		
34.B	Stryker	OR 1 Ceiling Mounted Nurse Station; 1 Shelf	SPS-2					1		
35.B	Stryker	OR 3 Ceiling Mounted Nurse Station; 1 Shelf	SPS-2					1		
36.B	Stryker	OR 4 Ceiling Mounted Nurse Station; 1 Shelf	SPS-2					1		
37.B	Stryker	Integration System; Video Routing Platform	1678100004					3		
38.B	Stryker	Hospital Status System	1678055001					1		
39.B	Stryker	OR 3 Surgical Light w/ Monitor; 2 Arm; Camera Ready; Sterile Control Prep & Light Handle	FD 2203					1		
40.B	Stryker	OR 4 Surgical Light w/ Monitor; 2 Arm; Camera Ready; Sterile Control Prep & Light Handle	FD 2203					1		
41.B	Stryker	OR 3 Surgical Light w/ Monitor; 2 Arm; Sterile Control Prep & Light Handle	FD 2203					1		
42.B	Stryker	OR 4 Surgical Light w/ Monitor; 2 Arm; Sterile Control Prep & Light Handle	FD 2203					1		
43.B	Stryker	OR 3 Ceiling Mounted Anesthesia Boom; 2 Row, 2 Arm, 1 Air, 2 Vac, 1 N2O Gas, 2 O2, 1 WAGD Gas	SFS-2					1		
44.B	Stryker	OR 4 Ceiling Mounted Anesthesia Boom; 2 Row, 2 Arm, 1 Air, 2 Vac, 1 N2O Gas, 2 O2, 1 WAGD Gas	SFS-2					1		

45.B	Stryker	Endoscopic/Surgical Room Hub Base System	240200100					5		
46.B	Stryker	32" OLED Surgical Display	240031300					10		
47.B	Stryker	32" Surgical Display Cover	240031051					10		
48.B	Stryker	DVI to HDMI Converter	240099265					2		
49.B	Stryker	S-Video/Composite to HDMI Converter	240099250					2		
50.B	Stryker	Endoscopic/Surgical Room Hub Device Control Package	240200103					5		
51.B	Stryker	Endoscopic/Surgical Room Hub Dicom Package	240200106					5		
52.B		Bid Package B Delivery & Installation						1		

TOTAL

COMPANY: _____ ADDRESS: _____

PHONE: _____ FAX: _____

NAME: _____ TITLE: _____

SIGNATURE: _____ DATE: _____

ADDITIONAL INFORMATION: _____

WinnMed

Bid Form
Package C

Date:	3/22/2024
District:	Winneshiek Medical Center
	901 Montgomery Street
Contact Name:	Ben Stevens-Chief Financial Officer
Contact Number:	(563) 387-3109

Bid Item #	Specified Vendor	Item Description	Specified Model #	Per Spec /Substitute	Bidding Vendor	Model #	Description	Quantity	Unit Price	Total Price
15.C	SHIMADZU	Digital Radiography System; 65kW Generator; Touch Screen Console; Elevating Table; Ceiling Rail System; Auto Wall Bucky; Workstation w/ 24" Monitor	RSP-A65-702C					1		
16.C	Stryker	LED Exam Light; Ceiling Mount	CE-3863075					8		
55.C	RF Technologies	Infant Security Systems; Server Enterprise software; Staff Alert Panel; (3) Double Door Systems; (12) Alarming Band Receivers w/ Antennas						1		
58.C	Midmark	Clinic Exam Chairs; Drawer Heater; Wired Controls; 650 lbs. weight capacity	MIM626005					39		
59.C	Midmark	Clinic Exam Chair Support Rails	MIM9A600002					39		
60.C	Midmark	Clinic Exam Chair Premium Upholstered Top Upgrade	MIM0022000814					41		
61.C	Midmark	Clinic Procedure Chair; Foot & Hand Pedal; Swing Away Instrument Tray; LED Exam Light; Vision Block Screen; Articulating Knee Crutches	MIM230001					2		
64.C	Unicas Medical	Stainless Steel Pass-Through Cabinets; 55" W x 60" H x 22.75" D; Sliding Door Surgery Room Side; Door Handle Sterile Hall Side	Type E Pass-Through					3		
66.C	Steris	Pass-Thru Blanket/Fluid Warmer	???					3		
67.C	Steris	Surgery Scrub Sink; 2- Station; 64" w x 27 1/2" D x 51 1/2" H; Infrared Faucet System	071655-000					3		
70.C	ARJO	Ceiling Mounted Patient Lift; 600 lbs. capacity	Max Sky 2					1		
73.C	AMSCO	OB Headwall; Backlit Accent Panel; built in electrical/data/medical gas connections; bed bumpers	NuLook Manifold System					6		
74.C		Delivery & Installation Included in Each Line Item								

TOTAL

COMPANY: _____ ADDRESS: _____
PHONE: _____ FAX: _____
NAME: _____ TITLE: _____
SIGNATURE: _____ DATE: _____

ADDITIONAL INFORMATION: _____

WinnMed

WinnMed **Issue Date:** **3/6/2024**
Expansion and Renovation
Decorah, IA 52101
Furniture Specifications

CONTACT: Ben Stevens - CFO
PHONE NUMBER: 563-387-3109

ITEM NUMBER:	1

ITEM NAME:	Cart Washer/Utensil Washer & Disinfector		
ROOM NUMBER:		**QUANTITY:**	

SPECIFICATION INFORMATION

MANUFACTURER: Steris
MODEL #: FW12102
DIMENSIONS: 70" W x 71.5" D x 94.25" H
DESCRIPTION: Cart and Utensil Washer/Disinfector; 460-480 V, 60 Hz, Steam Heated; Touch-Screen controls; Full-Glass Doors; 3 chemistry pumps; service side exterior panels and non-service exterior panels included

FURNITURE & EQUIPMENT IMAGE

901 Montgomery Street
Decorah, IA 52101

PHONE 563-382-2911
FAX 563-387-3102

WinnMed

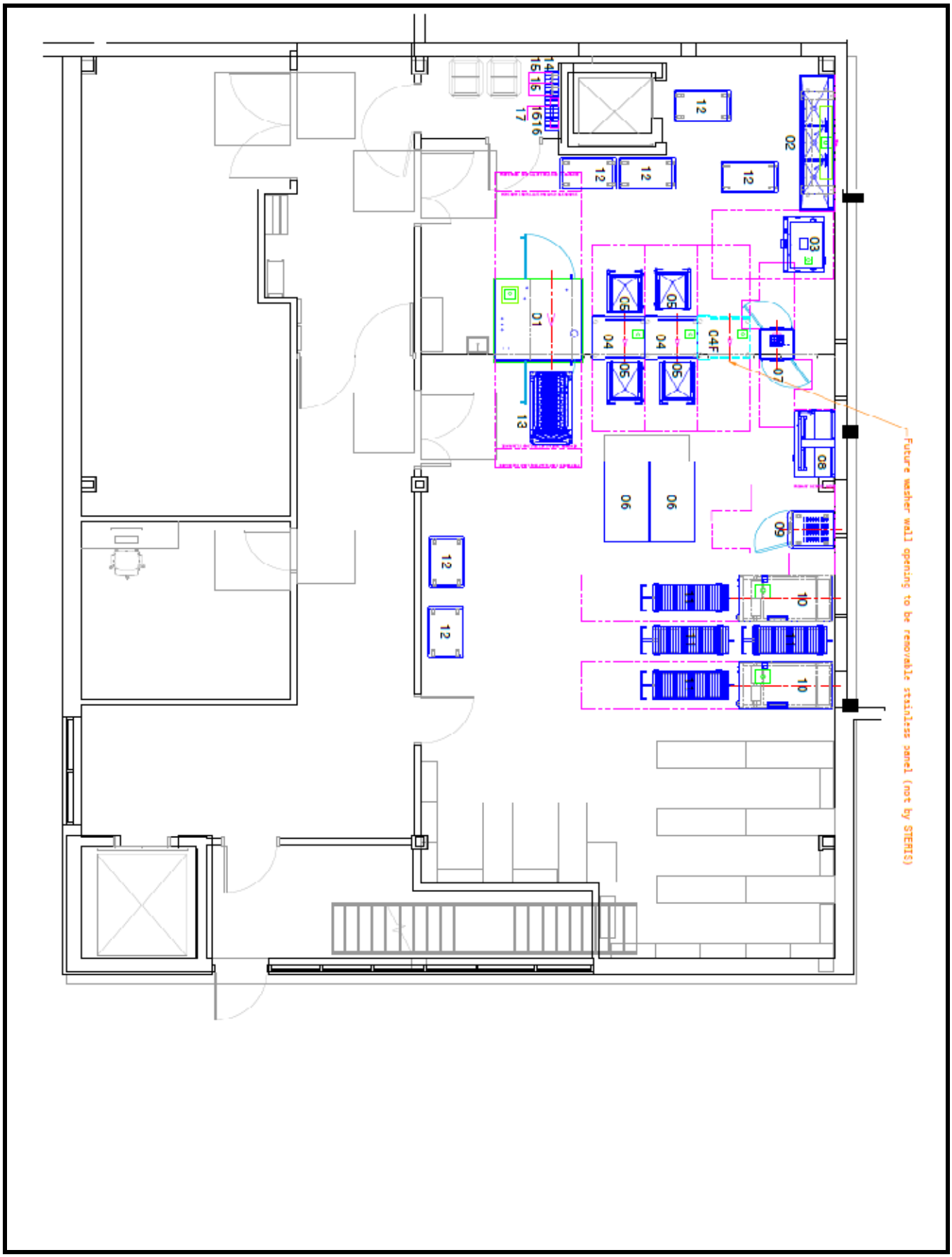

901 Montgomery Street
Decorah, IA 52101

PHONE 563-382-2911
FAX 563-387-3102

WinnMed

Released

TYPICAL INSTALLATION
PAGE 1 OF 2

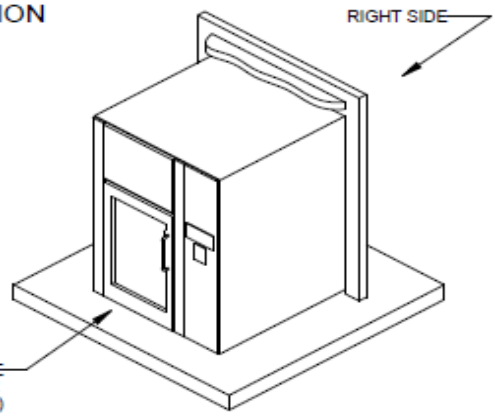

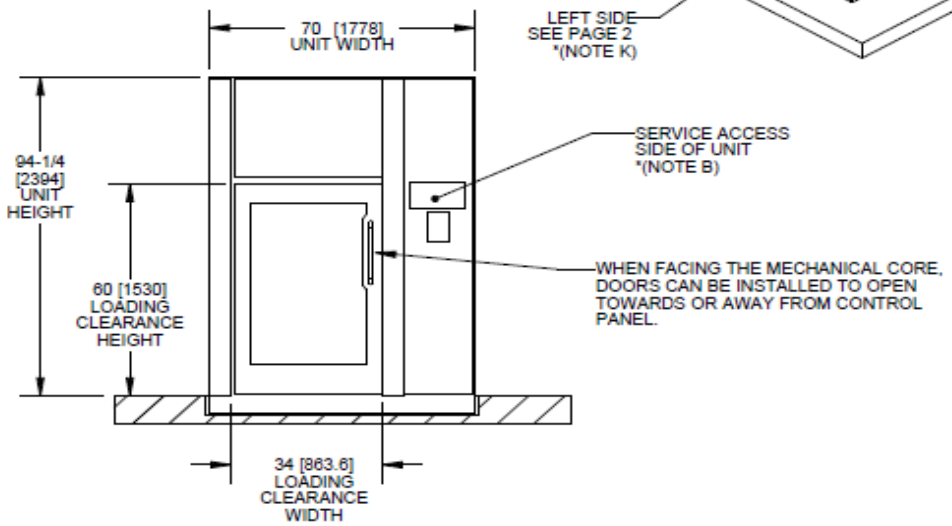

FRONT VIEW

*NOTES:

(A) UNLESS OTHERWISE SPECIFIED, ALL DIMENSIONS ARE IN INCHES [mm].
(B) SERVICE ACCESS SIDE OF UNIT IS RECOGNIZED BY THE TOUCH SCREEN AT THE RIGHT OF WASH CHAMBER. ELECTRICAL AND CONTROL COMPONENTS, AS WELL AS MOST OF SERVICABLE PARTS ARE ACCESSIBLE FROM THAT SIDE OF UNIT. NON-SERVICE SIDE IS EQUIPPED WITH THE TOUCH SCREEN ON THE LEFT OF THE WASH CHAMBER.
(C) CUSTOMER MUST BE SURE THAT MACHINE STANDS ON A NON-COMBUSTIBLE FLOOR.
(D) WEIGHTED EQUIVALENT SURFACE SOUND PRESSURE LEVEL: 65.0 dB(A) CALCULATED AS DESCRIBED IN ISO 3746.

STERIS Corporation	TITLE	EQUIPMENT DRAWING OF AMSCO® 1215 CART WASHER STEAM HEATED, W/O ACU-RINSE RES., PIT MOUNTED UNIT				
		SIZE: A	SCALE: N/A	DRAWN BY: Michel Blouin	DRAWING NUMBER: 12225978	PART NUMBER & REVISION
Page 1 of 12						12225978.F

This document contains confidential and proprietary information of STERIS Corporation. Neither this document nor the information herein are to be reproduced, either in part or in whole, except as specifically authorized by STERIS Corporation.

901 Montgomery Street
Decorah, IA 52101

PHONE 563-382-2911
FAX 563-387-3102

WinnMed

Released

TYPICAL INSTALLATION
PAGE 2 OF 2

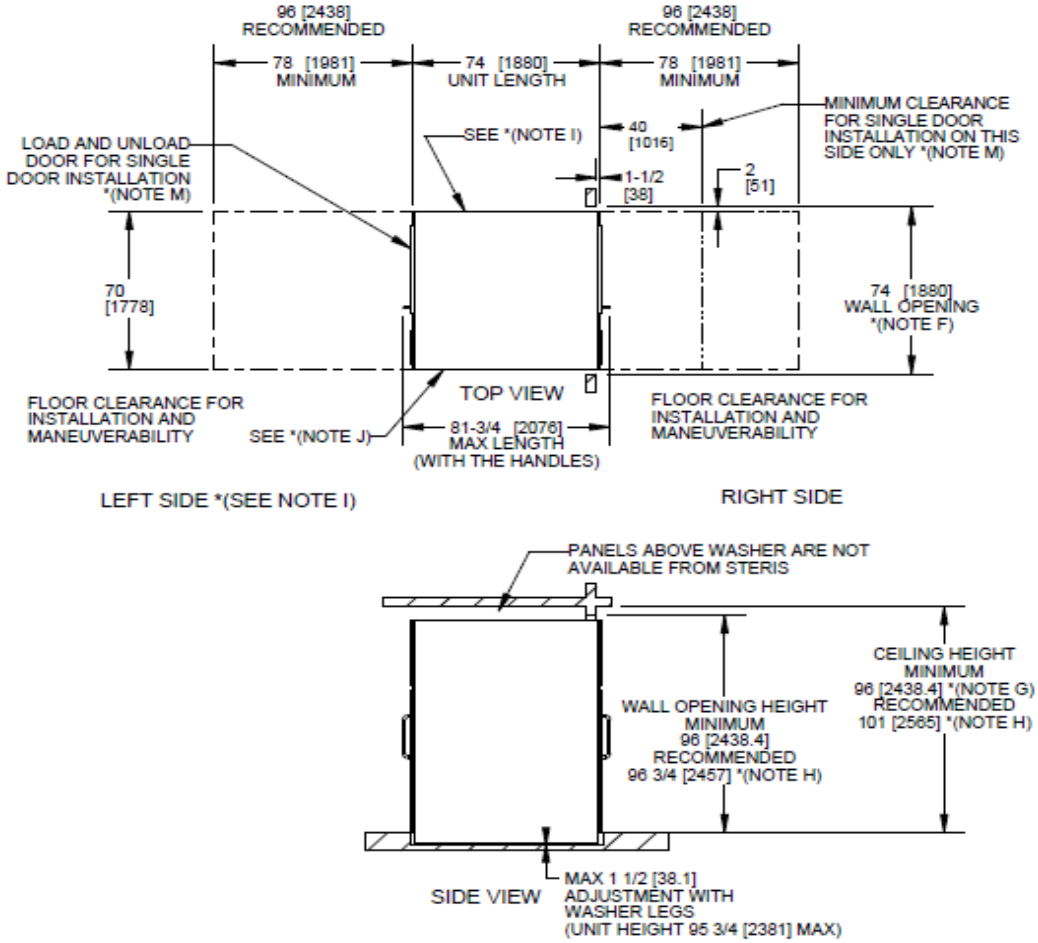

*NOTES:

(E) VERTICAL BARRIER WALL FLANGES ARE PROVIDED WITH UNIT TO FILL GAP BETWEEN UNIT AND WALL ON BOTH SIDES. DIMENSIONS ARE 5 in [127 mm] WIDTH X 101 1/2 in [2578 mm] LONG.
(F) HORIZONTAL BARRIER WALL FLANGES ARE PROVIDED WITH UNIT TO FILL GAP BETWEEN UNIT AND WALL. DIMENSIONS ARE 80 in [2032 mm] WIDTH X 5 in [127 mm] HEIGHT.
(G) MINIMUM REQUIRED DIMENSION. THE STANDARD BARRIER WALL FLANGES CAN'T BE USED AT THAT DIMENSION.
(H) RECOMMENDED DIMENSION. THE STANDARD BARRIER WALL FLANGES CAN BE USED AT THAT DIMENSION. *(SEE NOTE E AND NOTE F)
(I) IF NO BUILDING SIDE WALL IS PRESENT ON NON-SERVICE SIDE, NON-SERVICE SIDE EXTERIOR PANELS ACCESORY IS RECOMMENDED (FD37-7)
(J) IF NO BUILDING SIDE WALL IS PRESENT ON SERVICE SIDE, SERVICE SIDE EXTERIOR PANELS ACCESSORY IS RECOMMENDED (FD37-6)
(K) STERIS RECOMMENDS TO INSTALL UNIT WITH LEFT SIDE TO BE LOCATED ON SOILED SIDE (LOAD SIDE) OF SPD.
(L) PROCESS FLOW SIDE (LOADING DOOR) CAN BE EITHER CONFIGURED ON LEFT SIDE OR RIGHT SIDE. EXCEPT FOR SINGLE DOOR CONFIGURATION WHERE LOAD/UNLOAD DOOR IS ALWAYS THE LEFT DOOR (SEE NOTE M).
(M) SINGLE DOOR CONFIGURATION KIT AVAILABLE (FD36-6)

STERIS Corporation

TITLE: EQUIPMENT DRAWING OF AMSCO® 1215 CART WASHER
STEAM HEATED, W/O ACU-RINSE RES., PIT MOUNTED UNIT

SIZE:	SCALE:	DRAWN BY:	DRAWING NUMBER:	PART NUMBER & REVISION
A	N/A	Michel Blouin	12225978	12225978.F

Page 2 of 12

This document contains confidential and proprietary information of STERIS Corporation. Neither this document nor the information herein are to be reproduced, either in part or in whole, except as specifically authorized by STERIS Corporation.

901 Montgomery Street
Decorah, IA 52101
PHONE 563-382-2911
FAX 563-387-3102

WinnMed

Released

TYPICAL PIT INSTALLATION
(SEISMIC MOUNTS SHOWN)

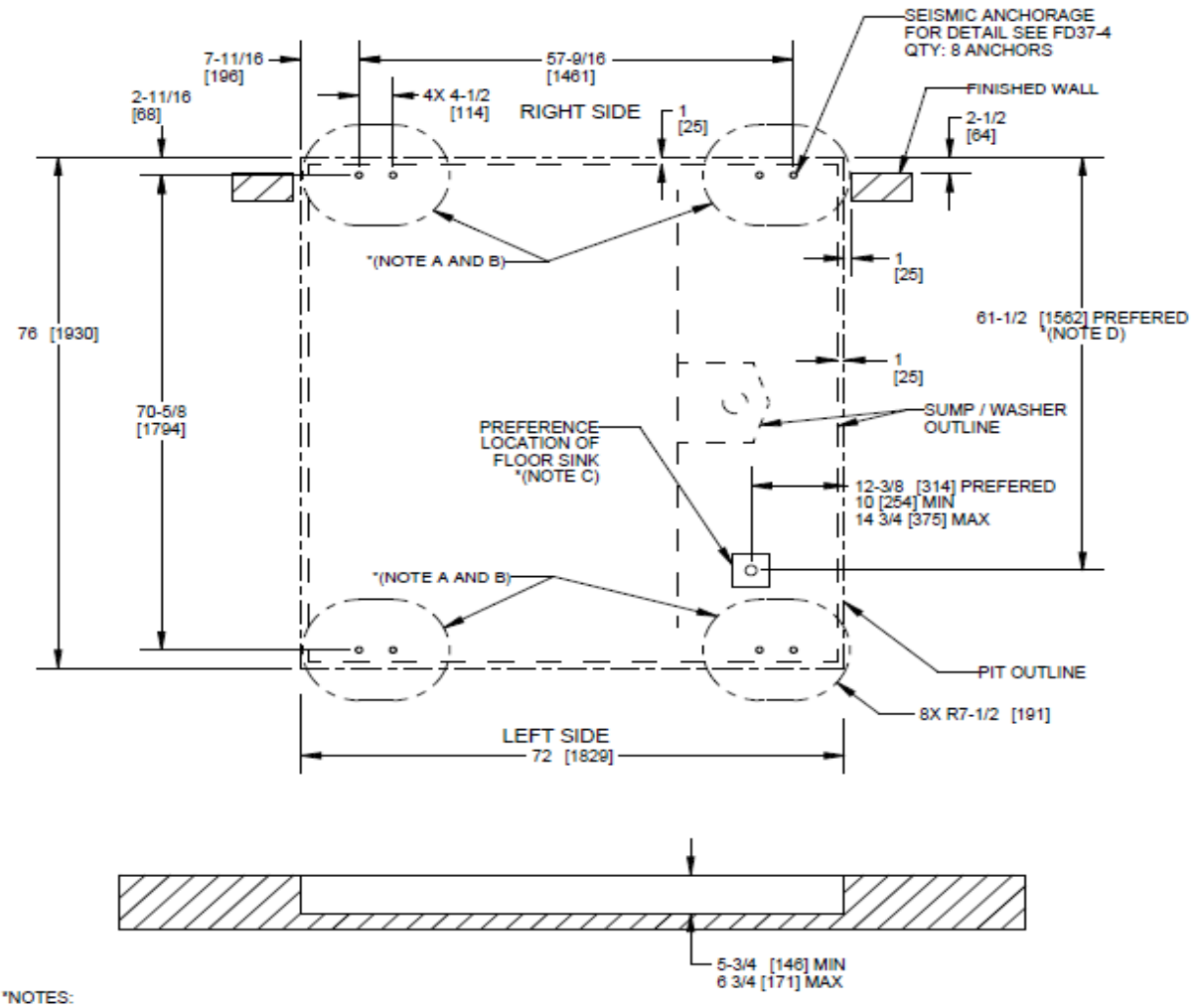

*NOTES:

(A) CONCRETE FLOOR MUST REMAIN FREE OF DEFECTS IN THESE AREA, AS PER ESR-1917 & ESR-3187.
FOR INSTALLATION OF SEISMIC ANCHORS (NOT PROVIDED BY STERIS) SEE SEISMIC REPORTS 11441618 AND 11053371.
(B) THE FLOOR SINK AND DRAIN SHALL NOT OCCUPY THESE AREAS.
(C) WITH SEISMIC 6 in x 6 in [152 mm x 152 mm] FLOOR SINK
WITH Ø4 in [102 mm] DRAIN IS REQUIRED WHEN USING SEISMIC MOUNTS.
WITHOUT SEISMIC REFER TO PAGE 9 FOR FLOOR SINK SPECIFICATION.
(D) WITH SEISMIC MOUNTS 57 [1448] MIN, 61 3/4 [1568] MAX
WITHOUT SEISMIC MOUNTS 57 [1448] MIN, 64 [1626] MAX

STERIS Corporation	TITLE	EQUIPMENT DRAWING OF AMSCO® 1215 CART WASHER STEAM HEATED, W/O ACU-RINSE RES., PIT MOUNTED UNIT				
	SIZE: A	SCALE: N/A		DRAWN BY: Michel Blouin	DRAWING NUMBER: 12225978	PART NUMBER & REVISION
Page 3 of 12						12225978.F

This document contains confidential and proprietary information of STERIS Corporation. Neither this document nor the information herein are to be reproduced, either in part or in whole, except as specifically authorized by STERIS Corporation.

901 Montgomery Street
Decorah, IA 52101

PHONE 563-382-2911
FAX 563-387-3102

WinnMed

Released

UTILITY (PLUMBING) CONNECTION POSITION

HW	HOT WATER
CW	COLD WATER
PW	PURE WATER
A	COMPRESSED AIR
D	FLOOR DRAIN LOCATION
S	STEAM
CR	CONDENSATE RETURN

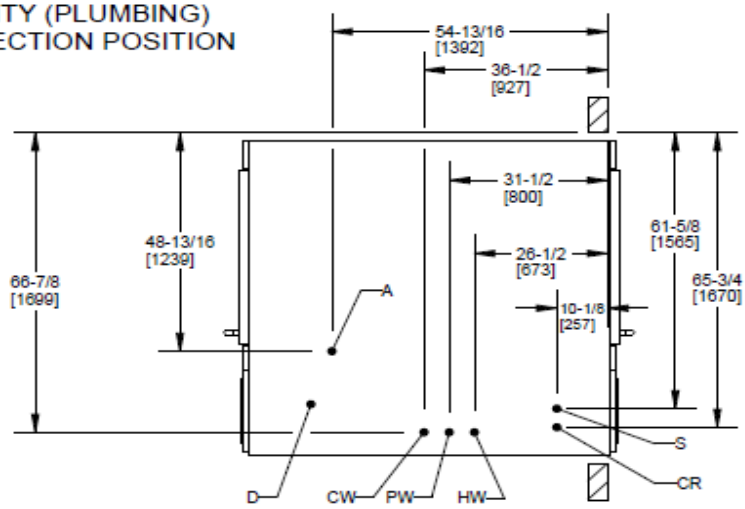

RECOMMENDED POSITION
SEE PAGE 3 FOR TOLERANCES

TOP VIEW

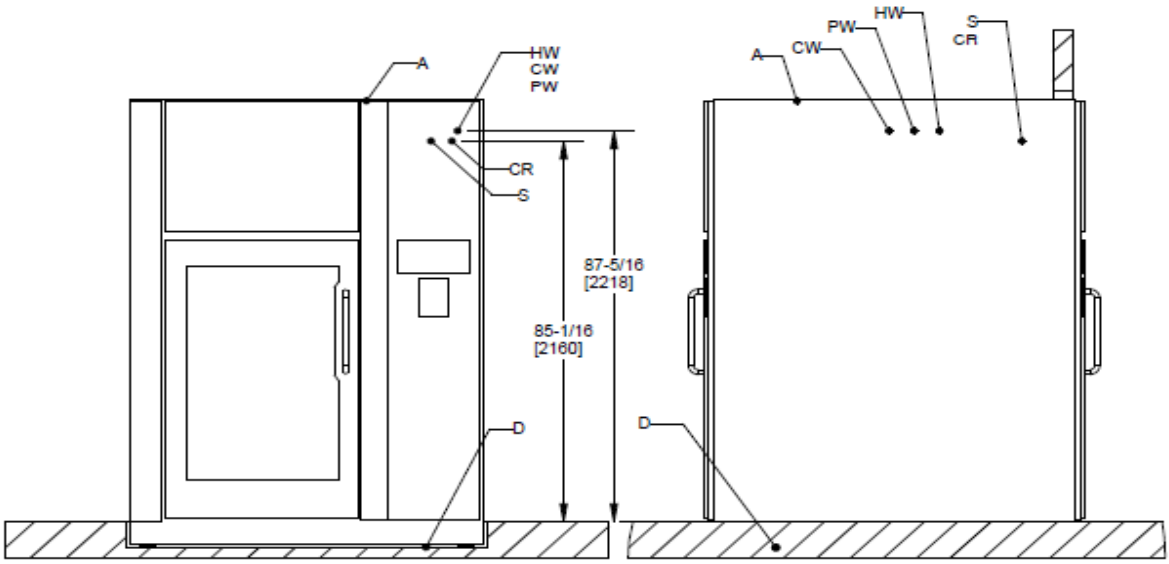

FRONT VIEW

SIDE VIEW

*NOTES:

(A) ALL OVER PRESSURE DEVICES TO CONTROL PRESSURE OF STEAM, WATER AND AIR ARE NOT INCLUDED. IT IS RESPONSIBILITY OF CUSTOMER TO INSTALL THOSE EQUIPMENT ON MAIN UTILITIES.
(B) ALL CONNECTIONS SHOULD BE IN ACCORDANCE WITH LOCAL CODES.

STERIS Corporation

TITLE: EQUIPMENT DRAWING OF AMSCO® 1215 CART WASHER
STEAM HEATED, W/O ACU-RINSE RES., PIT MOUNTED UNIT

SIZE:	SCALE:	DRAWN BY:	DRAWING NUMBER:	PART NUMBER & REVISION
A	N/A	Michel Blouin	12225978	12225978.F

Page 4 of 12

This document contains confidential and proprietary information of STERIS Corporation. Neither this document nor the information herein are to be reproduced, either in part or in whole, except as specifically authorized by STERIS Corporation.

901 Montgomery Street
Decorah, IA 52101

PHONE 563-382-2911
FAX 563-387-3102

WinnMed

Released

UTILITY (ELECTRICITY) CONNECTION POSITION

E	ELECTRICAL
N	NETWORK

RELAY - FUNCTION (SEE NOTE B)	
CR-11	READY TO LOAD CUSTOMER DRY CONTACT
CR-12	READY TO UNLOAD CUSTOMER DRY CONTACT
CR-20	COLD WATER REQUEST CUSTOMER DRY CONTACT
CR-21	HOT WATER REQUEST CUSTOMER DRY CONTACT
CR-22	VENTILATION REQUEST CUSTOMER DRY CONTACT
CR-23	PURE WATER REQUEST CUSTOMER DRY CONTACT

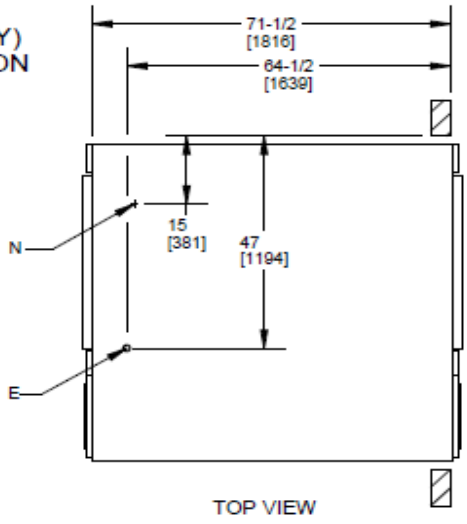

TOP VIEW

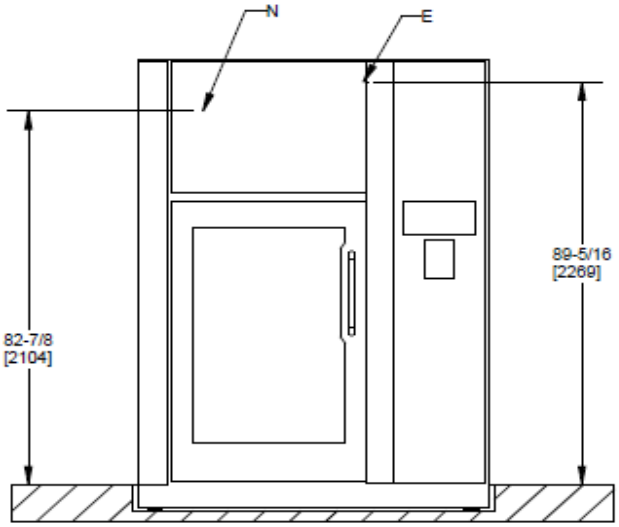

FRONT VIEW

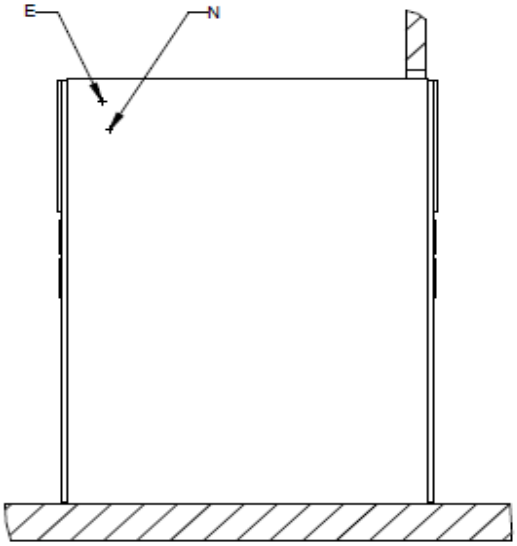

SIDE VIEW

STERIS Corporation

TITLE: EQUIPMENT DRAWING OF AMSCO® 1215 CART WASHER

STEAM HEATED, W/O ACU-RINSE RES., PIT MOUNTED UNIT

SIZE:	SCALE:	DRAWN BY:	DRAWING NUMBER:	PART NUMBER & REVISION
A	N/A	Michel Blouin	12225978	12225978.F

Page 5 of 12

This document contains confidential and proprietary information of STERIS Corporation. Neither this document nor the information herein are to be reproduced, either in part or in whole, except as specifically authorized by STERIS Corporation.

901 Montgomery Street
Decorah, IA 52101

PHONE 563-382-2911
FAX 563-387-3102

WinnMed

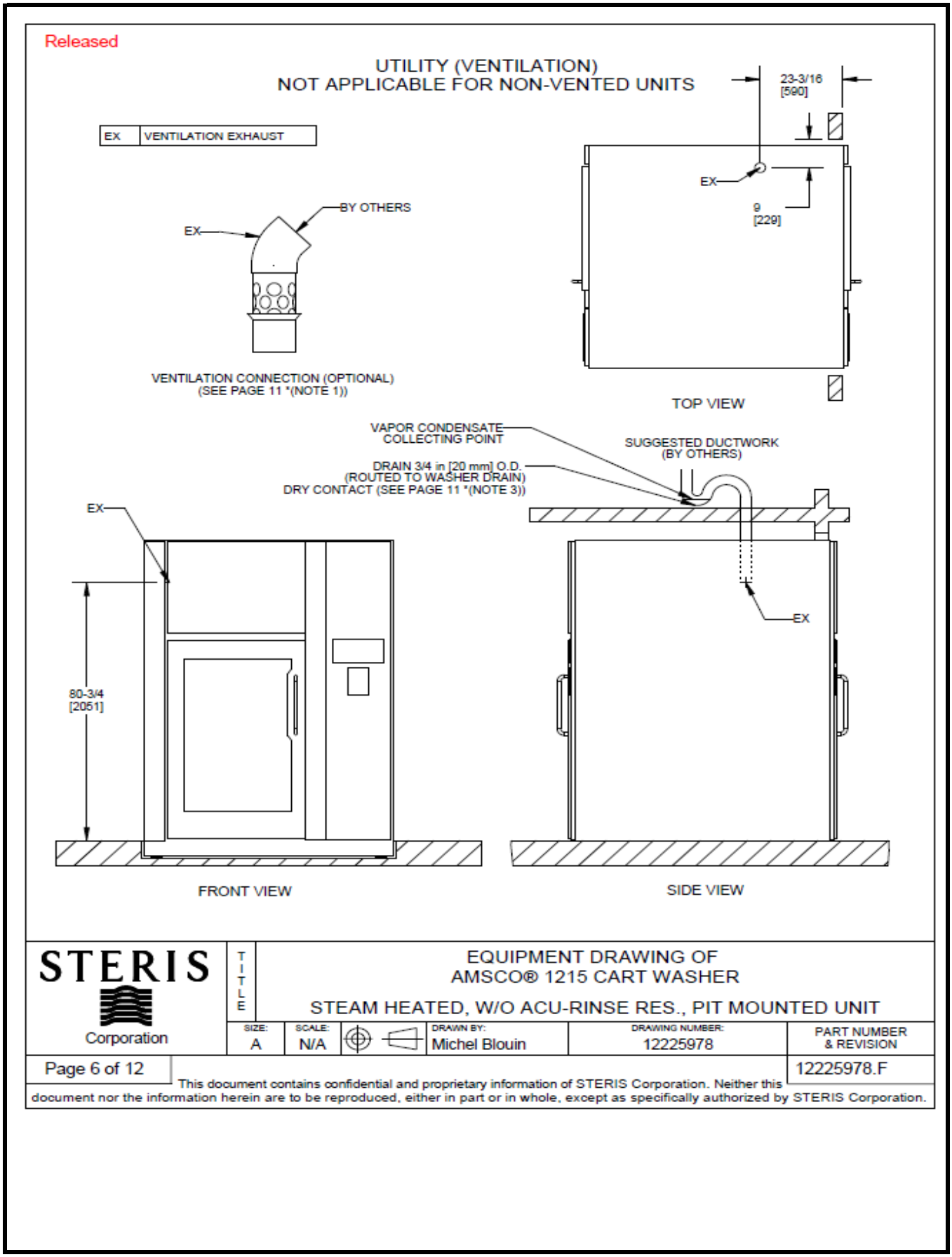

901 Montgomery Street
Decorah, IA 52101

PHONE 563-382-2911
FAX 563-387-3102

WinnMed

Released

DOSING STATION

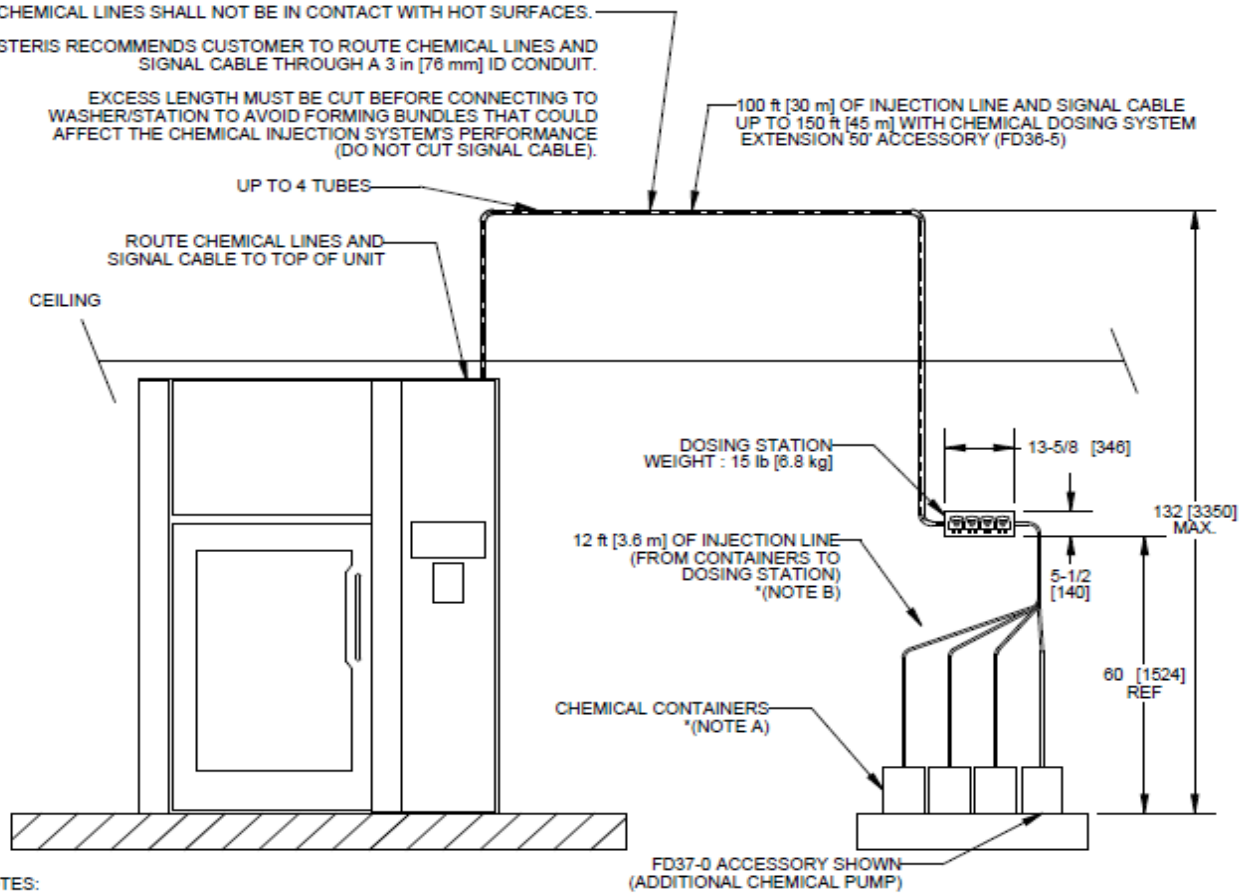

*NOTES:

(A) DOSING STATION AND CHEMICAL CONTAINERS MUST BE ON THE SAME FLOOR OF THE BUILDING AS THE WASHER/DISINFECTOR. CHEMICAL CONTAINER MUST BE LOCATED AT A LOWER HEIGHT THAN THE DOSING STATION. MAXIMUM CONTAINER INCLINATION IS 15 DEG FROM FLOOR. AMBIENT TEMPERATURE SHALL NOT EXCEED 32°C [90°F]

(B) HP PICKUP TUBE SYSTEM CAN PROVIDE UP TO TWO WASHERS WITH CHEMISTRY FROM THE SAME CONTAINER

		CART CYCLE (With PUC/PUC HP)	DECONTAM CYCLE (With Liquid Descaler / Prolystica ® Restore)
CHEMICAL (CH)	NEUTRAL OR ALKALINE DETERGENT CONSUMPTION PER CYCLE	1.8 oz [55 ml]	N/A
	RINSE AID CONSUMPTION PER CYCLE	0.36 oz [10.9 ml]	N/A
	DESCALER CONSUMPTION PER CYCLE	N/A	36 oz [1090 ml]

STERIS Corporation

TITLE: EQUIPMENT DRAWING OF AMSCO® 1215 CART WASHER

STEAM HEATED, W/O ACU-RINSE RES., PIT MOUNTED UNIT

SIZE:	SCALE:	DRAWN BY:	DRAWING NUMBER:	PART NUMBER & REVISION
A	N/A	Michel Blouin	12225978	12225978.F

Page 7 of 12

This document contains confidential and proprietary information of STERIS Corporation. Neither this document nor the information herein are to be reproduced, either in part or in whole, except as specifically authorized by STERIS Corporation.

901 Montgomery Street
Decorah, IA 52101

PHONE 563-382-2911
FAX 563-387-3102

WinnMed

Released

UTILITY REQUIREMENTS CHART (PLUMBING)

UTILITY	PARAMETER	REQUIREMENT	✓
HOT WATER (HW)	CONNECTION SIZE / TYPE	3/4 in / FEMALE NPT [3/4 in / MALE BSPT] WITH FLEXIBLE HOSES ACCESSORY (FD36-7 OR FD36-8) 1 in / FEMALE NPT [1 in / MALE BSPT]	
	PRESSURE RANGE	15 - 50 psig DYNAMIC [103-345 kPa] 15 - 90 psig STATIC [103-620 kPa]	
	OPERATING FLOW RATE	17 US GPM [64.4 L/min] TO 34 US GPM [128.7 L/min]	
	TOTAL CONSUMPTION PER CART CYCLE	36.0 US GAL [136.3 L] WITH ACU-WASH RESERVOIR: n/a	
	TEMPERATURE RANGE	110 °F [43 °C] TO 150 °F [65.5 °C] *(NOTE 3)	
	WATER QUALITY *(NOTE 5)	HARDNESS (CaCO3) : 50-80 ppm (MAX. 120 ppm)	
COLD WATER (CW) *(NOTE 6)	CONNECTION SIZE / TYPE	1 in / FEMALE NPT [1 in / MALE BSPT]	
	PRESSURE RANGE	30 - 50 psig DYNAMIC [206-345 kPa] 30 - 90 psig STATIC [206-620 kPa]	
	OPERATING FLOW RATE	VENTED CONFIGURATION: 17.5 US GPM [66.1 L/min] TO 22.6 US GPM [85.6 L/min] NON-VENTED CONFIGURATION 28.4 US GPM [107.4 L/min] TO 36.6 US GPM [138.7 L/min]	
	TOTAL CONSUMPTION PER CART CYCLE	CONDENSATE RETURN COOL DOWN: 4.9 US GAL [18.5 L] NON-VENTED SYSTEM: 88.7 US GAL [335.7 L] DRAIN COOLDOWN: 38.6 US GAL [146.2 L] ACU-COOLDOWN: 20.2 US GAL [76.4 L]	
	TEMPERATURE RANGE	34 °F [1 °C] TO 70 °F [21 °C]	
	WATER QUALITY *(NOTE 5)	HARDNESS (CaCO3) : 50-80 ppm (MAX. 120 ppm)	
PURE WATER (PW) *(NOTE 8)	CONNECTION SIZE / TYPE	3/4 in / FEMALE NPT [3/4 in / MALE BSPT] WITH FLEXIBLE HOSES ACCESSORY (FD36-7 OR FD36-8) 1 in / FEMALE NPT [1 in / MALE BSPT]	
	PRESSURE RANGE	5 - 50 psig DYNAMIC [34-345 kPa] 5 - 90 psig STATIC [34-620 kPa]	
	OPERATING FLOW RATE	11 US GPM [41.6 L/min] TO 34 US GPM [128.7 L/min]	
	TOTAL CONSUMPTION PER UTENSIL OR CONTAINER CYCLE *(NOTE 7 AND 8)	18.0 US GAL [68.1 L]	
	TEMPERATURE RANGE	70 °F [21.1 °C] TO 150 °F [65.5 °C]	
	RESISTIVITY (CONDUCTIVITY)	> 0.1 MΩ -cm (< 10 µS/cm)	
	pH	6.8 - 7.5	

NOTES

1. STERIS REQUIRES CUSTOMER TO INSTALL WATER HAMMER ARRESTOR, UNION & PRESSURE GAUGE.
2. CUSTOMER MUST PROVIDE UTILITY CONNECTIONS WITH SHUTOFFS DISCONNECTS WITHIN 2 FEET OF THE PERIMETER OF THE EQUIPMENT AND BELOW THE FINISHED CEILING.
   *STERIS OFFERS FLEXIBLE HOSES ACCESSORY (FD36-7 OR FD36-8) WITH INSTRUCTIONS. THIS ACCESSORY INCLUDES SHUTOFFS VALVES
3. OPTIMAL CLEANING EFFICIENCY WHEN HOT WATER IS AT A MAXIMUM OF 135 F [57.2 C].
4. SAMPLING VALVES INSTALLATION AS CLOSE AS POSSIBLE TO WASHER WATER CONNECTIONS IS RECOMMENDED.
5. STERIS RECOMMENDS THE FOLLOWING WATER QUALITY PARAMETERS:
   TOTAL DISSOLVED SOLIDS: 100-200 ppm (MAX. 500 ppm)
   TOTAL ALKALINITY (CaCO3) : 70-120 ppm (MAX. 180 ppm)
   pH : 6.8-7 (MAX. 7.5)
   TOTAL SILICA : 0.1-0.5 ppm (MAX. 1 ppm)
6. BACK FLOW PREVENTER AGAINST BACK SIPHONAGE MAY BE REQUIRED (LOCAL PLUMBING CODE)
7. PW IS OPTIONAL. IF UNAVAILABLE, UNIT WILL PROCESS THERMAL RINSE USING HOT WATER SUPPLY.
8. IF PW IS PRESENT, ONLY CONTAINER AND UTENSIL CYCLE WILL USE PW BY DEFAULT. CART CYCLE WILL STILL USE HW.

STERIS Corporation

TITLE: EQUIPMENT DRAWING OF AMSCO® 1215 CART WASHER
STEAM HEATED, W/O ACU-RINSE RES., PIT MOUNTED UNIT

SIZE:	SCALE:	DRAWN BY:	DRAWING NUMBER:	PART NUMBER & REVISION
A	N/A	Michel Blouin	12225978	12225978.F

Page 8 of 12

This document contains confidential and proprietary information of STERIS Corporation. Neither this document nor the information herein are to be reproduced, either in part or in whole, except as specifically authorized by STERIS Corporation.

901 Montgomery Street
Decorah, IA 52101

PHONE 563-382-2911
FAX 563-387-3102

WinnMed

Released

UTILITY REQUIREMENTS CHART (PLUMBING)

UTILITY	PARAMETER	REQUIREMENT	✓	NOTES
COMPRESSED AIR (A)	CONNECTION SIZE / TYPE	1/8 in / FEMALE NPT [1/8 in / MALE BSPT]		1. AIR PURITY PER ISO-8573-1: 2010 [7:4:4] MAX. PARTICLE DENSITY: 10 mg/m³ MAX. DEW POINT FOR WATER CONTENT: 37 °F [3 °C] MAX. OIL CONCENTRATION FOR THE OIL CONTENT: 5 mg/m³ 2. STERIS RECOMMENDS A REFRIGERATED AIR DRYER WHERE ENVIRONMENTAL DEW POINT CONDITIONS ARE HIGHER THAN RECOMMENDED. 3. CUSTOMER MUST PROVIDE UTILITY CONNECTIONS WITH SHUTOFFS DISCONNECTS WITHIN 2 FEET OF THE PERIMETER OF THE EQUIPMENT AND BELOW THE FINISHED CEILING.
	PRESSURE RANGE	80 - 125 psig DYNAMIC [552-860 kPa] 80 - 125 psig STATIC [552-860 kPa]		
	OPERATING FLOW RATE	6 SCFM [170 L/min]		
DRAIN (D)	FLOOR DRAIN SIZE	4 in [102 mm] O.D. WITH FLOOR SINK FLOOR SINK WITHOUT SEISMIC: MIN. 6IN X 6IN / MAX. 8IN X 8IN FLOOR SINK WITH SEISMIC: 6IN X 6IN REQUIRED		4. WASHER DRAIN OUTLET SIZE 3 In 5. FOR DRAIN REQUIREMENTS WHEN USING SEISMIC MOUNTS, SEE PAGE 3.
	OPERATING FLOW RATE	GRAVITY DRAIN : Non-vented unit: 72 US GPM [272.5 L/min] Vented unit: 58.6 US GPM [221.9 L/min]		
CHEMICAL DOSING SYSTEM	CEILING ROUTING CONDUIT	3 in CONDUIT		6. STERIS RECOMMENDS TO ROUTE CHEMICAL LINES AND SIGNAL CABLE THROUGH A 3 In [76 mm] ID CONDUIT (BY OTHERS). 100 ft [30 m] OF INJECTION LINE AND SIGNAL CABLE ARE PROVIDED WITH THE UNIT. UP TO 150 ft [45 m] WITH CHEMICAL DOSING SYSTEM EXTENSION 50' ACCESSORY (FD36-5)
STEAM INLET (S)	CONNECTION SIZE / TYPE	1 in / FEMALE NPT [1 in / MALE BSPT]		7. STERIS REQUIRES AT LEAST 97% SATURATED DRY PLANT STEAM, FREE OF DIRT, RESIDUES AND CONTAMINANTS. 8. STERIS RECOMMENDS TO INSTALL A STEAM TRAP AS CLOSE AS POSSIBLE TO UNIT CONNECTION. 9. PROPER OPERATION OF THE WASHER REQUIRES A MINIMUM PRESSURE DIFFERENTIAL OF 21.5 psig [148 kPa] BETWEEN STEAM INLET AND CONDENSATE RETURN. IN CASES OF LOW STEAM INLET PRESSURE, CONDENSATE CAN BE ROUTED TO DRAIN TO INCREASE DIFFERENTIAL. *STERIS OFFERS CONDENSATE RETURN TO DRAIN ACCESSORY (FD36-4) 10. CUSTOMER MUST PROVIDE UTILITY CONNECTIONS WITH SHUTOFFS DISCONNECTS WITHIN 2 FEET OF THE PERIMETER OF THE EQUIPMENT AND BELOW THE FINISHED CEILING. 11. STERIS REQUIRES TO INSTALL PRESSURE GAUGE. 12. STERIS REQUIRES A LOW PRESSSURE CONDENSATE RETURN SYSTEM ON STEAM AND CONSENSATE LINES.
	PRESSURE RANGE	30 - 50 psig DYNAMIC [206-345 kPa] 30 - 90 psig STATIC [206-620 kPa]		
	OPERATING MASS FLOW RATE	771.1 lb/h [350.5 kg/h] AT 30 psig [207 kPa] 1056.5 lb/h [480.2 kg/h AT 50 psig [345 kPa]		
	TOTAL CONSUMPTION PER CART CYCLE	27.8 lb [12.6 kg]		
CONDENSATE RETURN (CR)	PRESSURE RANGE	0 - 8.5 psig [0 - 68.9 kPa] BACK PRESSURE (17 ft [5.2 m] ELEVATION) (FOR 30 psig OF STEAM INLET PRESSURE) SEE *NOTE 9		
	OPERATING FLOW RATE	PEAK : 2.1 US GPM [8 L/min]		
	CONNECTION SIZE / TYPE	1 in / FEMALE NPT [1 in / MALE BSPT]		

STERIS Corporation

TITLE: EQUIPMENT DRAWING OF AMSCO® 1215 CART WASHER
STEAM HEATED, W/O ACU-RINSE RES., PIT MOUNTED UNIT

SIZE:	SCALE:	DRAWN BY:	DRAWING NUMBER:	PART NUMBER & REVISION
A	N/A	Michel Blouin	12225978	12225978.F

This document contains confidential and proprietary information of STERIS Corporation. Neither this document nor the information herein are to be reproduced, either in part or in whole, except as specifically authorized by STERIS Corporation.

901 Montgomery Street
Decorah, IA 52101
PHONE 563-382-2911
FAX 563-387-3102

Released

UTILITY REQUIREMENTS CHART (ELECTRIC)

UTILITY		PARAMETER AND REQUIREMENT			✓	NOTES
		CONNECTION SIZE/TYPE	NOMINAL AMPERAGE	RECOMMENDED CIRCUIT		
ELECTRICITY (EL)	200-208V 60 Hz, 3-Ph	1 1/4 in [35] 2 in [53] CONDUIT	23.1 A	30 A		1. ALL CONNECTIONS SHOULD BE IN ACCORDANCE WITH LOCAL CODES. 2. NEUTRAL WIRE NOT REQUIRED. EXCEPT FOR 380-400-415V 50Hz, 380-400V 60Hz AND 400V 60Hz. 3. ALWAYS FOLLOW LOCAL ELECTRICAL CODES AND SAFETY-RELATED WORK PRATICES TO DETERMINE THE VALUE OF PROTECTION. 4. WIRING ON THE EQUIPMENT TERMINATES AT A JUNCTION BOX. WIRING BETWEEN JUNCTION BOX AND BUILDING SERVICE LINES ARE NOT SUPPLIED BY STERIS. 5. A DISCONNECT SWITCH MEETING THE LOCAL ELECTRICAL CODES REQUIREMENTS MUST BE INSTALLED IN ELECTRICAL SUPPLY LINES NEAR WASHER/DISINFECTOR. THE DISCONNECT DEVICE OF THE EQUIPMENT MUST BE WITHIN SIGHT AND REACH OF THE OPERATOR, NO MORE THAN 1 m (39 In) AWAY FROM EQUIPMENT AND BELOW FINISHED CEILING. DISCONNECT SWITCH SHALL BE LOCKOUT CAPABLE 6. STERIS RECOMMENDS A LIGHT IN SERVICE AREA.
	380-400V 60 Hz, 3-Ph	1 1/4 in [35] 2 in [53] CONDUIT	12.2 A	20 A		
	400V 60 Hz, 3-Ph	1 1/4 in [35] 2 in [53] CONDUIT	11.6 A	15 A		
	460-480V 60 Hz, 3-Ph	1 1/4 in [35] 2 in [53] CONDUIT	11 A	15 A		
	600V 60 Hz, 3-Ph	1 1/4 in [35] 2 in [53] CONDUIT	8.1 A	15 A		
	380-400-415V 50 Hz, 3-Ph	1 1/4 in [35] 2 in [53] CONDUIT	12.6 A	20 A		
NETWORK (N) OPTIONAL		100/1000 BASE T SUPPORTING TCP/IP PROTOCOL RJ45F CONNECTION				7. NETWORK CONNECTION (IF APPLICABLE): - ACTIVE NETWORK DROP WITH CAT 5/6 CABLE WITHIN 10FT [3m] OF UNIT - STATIC OR DHCP RESERVED IP ADDRESS (FOR EACH UNIT) - NETWORK CABLE SUPPLIED BY FACILITY.

STERIS Corporation

TITLE: EQUIPMENT DRAWING OF AMSCO® 1215 CART WASHER
STEAM HEATED, W/O ACU-RINSE RES., PIT MOUNTED UNIT

SIZE:	SCALE:	DRAWN BY:	DRAWING NUMBER:	PART NUMBER & REVISION
A	N/A	Michel Blouin	12225978	12225978.F

This document contains confidential and proprietary information of STERIS Corporation. Neither this document nor the information herein are to be reproduced, either in part or in whole, except as specifically authorized by STERIS Corporation.

901 Montgomery Street
Decorah, IA 52101

PHONE 563-382-2911
FAX 563-387-3102

Released

UTILITY REQUIREMENTS CHART

UTILITY	PARAMETER	REQUIREMENT	✓	NOTES
VENTILATION EXHAUST (EX)	CONNECTION SIZE	6 in [152 mm] OUTSIDE DIAMETER		1. NOT REQUIRED WITH NON VENTED UNIT. 2. STERIS REQUIRES CORROSION-RESISTANT AND WATER-TIGHT DUCT: - MIN OPERATING TEMPERATURE 210 °F [99 °C] - SLOPED TOWARDS THE WASHER AND NO DEAD LEGS - INSTALL DRAIN PART AT LOWEST POINT NEAR UNIT 3. EXHAUST FAN NORMALLY OPEN-AUXILIARY CONTACTS IS AVAILABLE TO SUPPLY A SIGNAL TO THE FACILITY HVAC CONTROL SYSTEM WHENEVER THE WASHER VENTILATION EXHAUST FAN IS IN OPERATION.
	PRESSURE RANGE	1/2 inH2O [13 mmH2O] VACUUM AT CONNECTION		
	OPERATING FLOW RATE	350 SCFM [9.9 m³/min]		
	TEMPERATURE RANGE	MAX. 210 °F [99 °C]		

	TYPICAL HEAT LOSS AT 75 °F [24 °C] CONTINUOUS OPERATION	
	NON-VENTED UNIT WITHOUT ACU-RINSE RES.	VENTED UNIT WITHOUT ACU-RINSE RES.
CLEAN SIDE	1313 Btu/h [385 Wh]	1313 Btu/h [385 Wh]
SOILED SIDE	8567 Btu/h [2511 Wh]	2488 Btu/h [729 Wh]
TOTAL	9880 Btu/h [2896 Wh]	3801 Btu/h [1114 Wh]

VALUES INCLUDE HEAT LOSS DURING DOOR OPENING FOR LOADING AND UNLOADING OPERATIONS. "TOTAL" WILL VARY DEPENDING ON DISINFECTION TIME AND TEMPERATURE, DRYING TIME AND TEMPERATURE AND USE RATE OF UNIT.
AN ADDITIONAL HEAT LOSS FOR LOAD COOL DOWN IN CLEAN SIDE CAN BE ADDED TO THE TOTAL HEAT LOSS OF THE WASHER: MAXIMUM 793 Btu [836 kJ]

STERIS Corporation

TITLE: EQUIPMENT DRAWING OF AMSCO® 1215 CART WASHER
STEAM HEATED, W/O ACU-RINSE RES., PIT MOUNTED UNIT

SIZE:	SCALE:	DRAWN BY:	DRAWING NUMBER:	PART NUMBER & REVISION
A	N/A	Michel Blouin	12225978	12225978.F

This document contains confidential and proprietary information of STERIS Corporation. Neither this document nor the information herein are to be reproduced, either in part or in whole, except as specifically authorized by STERIS Corporation.

901 Montgomery Street
Decorah, IA 52101
PHONE 563-382-2911
FAX 563-387-3102

WinnMed

Released

PHYSICAL SPECIFICATIONS

VERIFY THAT HALLS, DOORS, ELEVATORS AND ALL OTHER ENTRANCES MEET WEIGHT AND DIMENSIONAL CLEARANCE SPECIFICATIONS:	
ACCESS TO INSTALLATION SITE	ACCESSIBLE BY PALLET JACK AND/OR FORK LIFT.
SHIPPING WEIGHT AND DIMENSIONS (W x H x L)	CRATE A: 575 lb [260 kg] 37 x 56 x 83 in [940 x 1530 x 2110 mm]
	CRATE B: 945 lb [430 kg] 37 x 81 x 83 in [940 x 2060 x 2110 mm]
	CRATE C: 510 lb [232 kg] 38 x 83 x 61 in [970 x 2110 x 1550 mm]
	CRATE D: 400 lb [181 kg] 38 x 83 x 61 in [970 x 2110 x 1550 mm]
	CRATE E: 410 lb [186 kg] 38 x 83 x 61 in [970 x 2110 x 1550 mm]
	CRATE F: 900 lb [408 kg] 37 x 45 x 83 in [940 x 1150 x 2110 mm]
	CRATE G: 840 lb [381 kg] 37 x 45 x 106 in [940 x 1150 x 2700 mm]
	CRATE H: 660 lb [299 kg] 37 x 78 x 61 in [940 x 1990 x 1550 mm]
LARGEST UNCRATED PIECE: WEIGHT AND DIMENSIONS (W x H x L)	CHAMBER CENTRAL PART (CRATE C): WEIGHT: 204 LB [93 kg] 33-3/4 x 72 x 50 in [860 x 1830 x 1270 mm]
HEAVIEST UNCRATED PIECE: WEIGHT AND DIMENSIONS (W x H x L)	SUMP (CRATE B): WEIGHT: 337 lb [153 kg] 69 x 8 x 77 in [1753 x 203 x 1956 mm]
OPERATING DIMENSION W x H x L	W 70 x H 94-1/4 x L 74 [1778 mm x 2394 mm x 1880 mm]
MAXIMUM OPERATING WEIGHT WATER, RACK AND LOAD	3203 lb [1453 kg]
AVERAGE FLOOR LOAD OVER WASHER FOOTPRINT	0.57 psi [3.93 kPa]
MAX. FLOOR LOAD AT WASHER FOOT PADS (3 in [76 mm] DIAMETER PADS)	154 psi [1062 kPa]
NOISE LEVEL: A-WEIGHTED EQUIVALENT SURFACE SOUND PRESSURE LEVEL	65.0 dB(A) CALCULATED AS DESCRIBED IN ISO 3746.
OPENING AREA FROM CLEAN SIDE TO SOILED SIDE	40 in² [25806mm²]
CHAMBER DIMENSION W x H x L VOLUME	W 37-1/8" X H 60" X D 66-1/8" [943 mm x 1524 mm x 1679 mm] 85.2 ft³ [2.41 m³]
FIRE PREVENTION DEVICES	STERIS DOES NOT RECOMMEND INSTALLATION OF SPRINKLER OVER THE UNIT BUT IF REQUIRED BY LOCAL CODE IT MUST BE FUSE TO 260 F (126 C) OR ABOVE. ANY SPRINKLER HEADS IN FRONT OF THE LOAD/UNLOAD DOORS MUST ALSO BE FUSE TO 260 F (126 C) OR ABOVE.

1. LEVELING FEET ARE PROVIDED FOR PROPER INSTALLATION.
2. PERMISSIBLE ENVIRONMENTAL CONDITIONS.
   THIS EQUIPMENT IS DESIGNED TO GIVE OPTIMAL RESULTS UNDER THE FOLLOWING CONDITIONS:
   - INDOOR USE ONLY;
   - ALTITUDE OF OPERATION UP TO 6562 ft [2000 m];
   - TEMPERATURE OF 41 TO 104 °F [5 to 40 °C];
   - MAXIMUM RELATIVE HUMIDITY IS 80% FOR TEMPERATURE UP TO 88 °F [31 °C], DECREASING LINEARLY TO 50% RELATIVE HUMIDITY AT 104 °F [40 °C];
   - POLLUTION DEGREE 2: EQUIPMENT MUST BE INSTALLED IN AN ENVIRONMENT WHERE NORMALLY ONLY NON-CONDUCTIVE POLLUTION OCCURS BUT WHERE OCCASIONAL, TEMPORARY CONDUCTIVITY CAUSED BY CONDENSATION CAN BE EXPECTED (AS DETERMINED ACCORDING TO INTERNATIONAL STANDARD EN/IEC 61010-1).
3. STERIS ASSUMES NO RESPONSIBILITY FOR CHANGES MADE TO, OR FAILURE TO OBSERVE THE SPECIFICATIONS ON EQUIPMENT DRAWING AND NOTE PAGES. SPECIFICATIONS AND DESCRIPTIONS ARE SUBJECT TO CHANGE WITHOUT NOTICE.

STERIS Corporation

TITLE: EQUIPMENT DRAWING OF AMSCO® 1215 CART WASHER
STEAM HEATED, W/O ACU-RINSE RES., PIT MOUNTED UNIT

SIZE:	SCALE:	DRAWN BY:	DRAWING NUMBER:	PART NUMBER & REVISION
A	N/A	Michel Blouin	12225978	12225978.F

This document contains confidential and proprietary information of STERIS Corporation. Neither this document nor the information herein are to be reproduced, either in part or in whole, except as specifically authorized by STERIS Corporation.

901 Montgomery Street
Decorah, IA 52101
PHONE 563-382-2911
FAX 563-387-3102

WinnMed

WinnMed **Issue Date:** **3/6/2024**
Expansion and Renovation
Decorah, IA 52101
Furniture Specifications

CONTACT: Ben Stevens - CFO
PHONE NUMBER: 563-387-3109

ITEM NUMBER:	2

ITEM NAME:	Triple Bay Reprocessing Sink		
ROOM NUMBER:		**QUANTITY:**	

SPECIFICATION INFORMATION

MANUFACTURER: Steris
MODEL #: SINK50120
DIMENSIONS: 120" W x 28 1/16" D x 33"-42" Working H
DESCRIPTION: 3 Basin adjustable height reprocessing sink; bay dimensions 30" w x 17" H x 10" D; (1) air pistol w/ tip attachment; (1) water pistol w/ tip attachment; (2) back splash-mounted pre-rinse/ faucet comb; (1) back splash-mounted treated water faucet and magnetic back splash; 120 V; 15A GFCI protected outlet requirement; Draws 3 amps; External Drain Lever Handles

FURNITURE & EQUIPMENT IMAGE

WinnMed

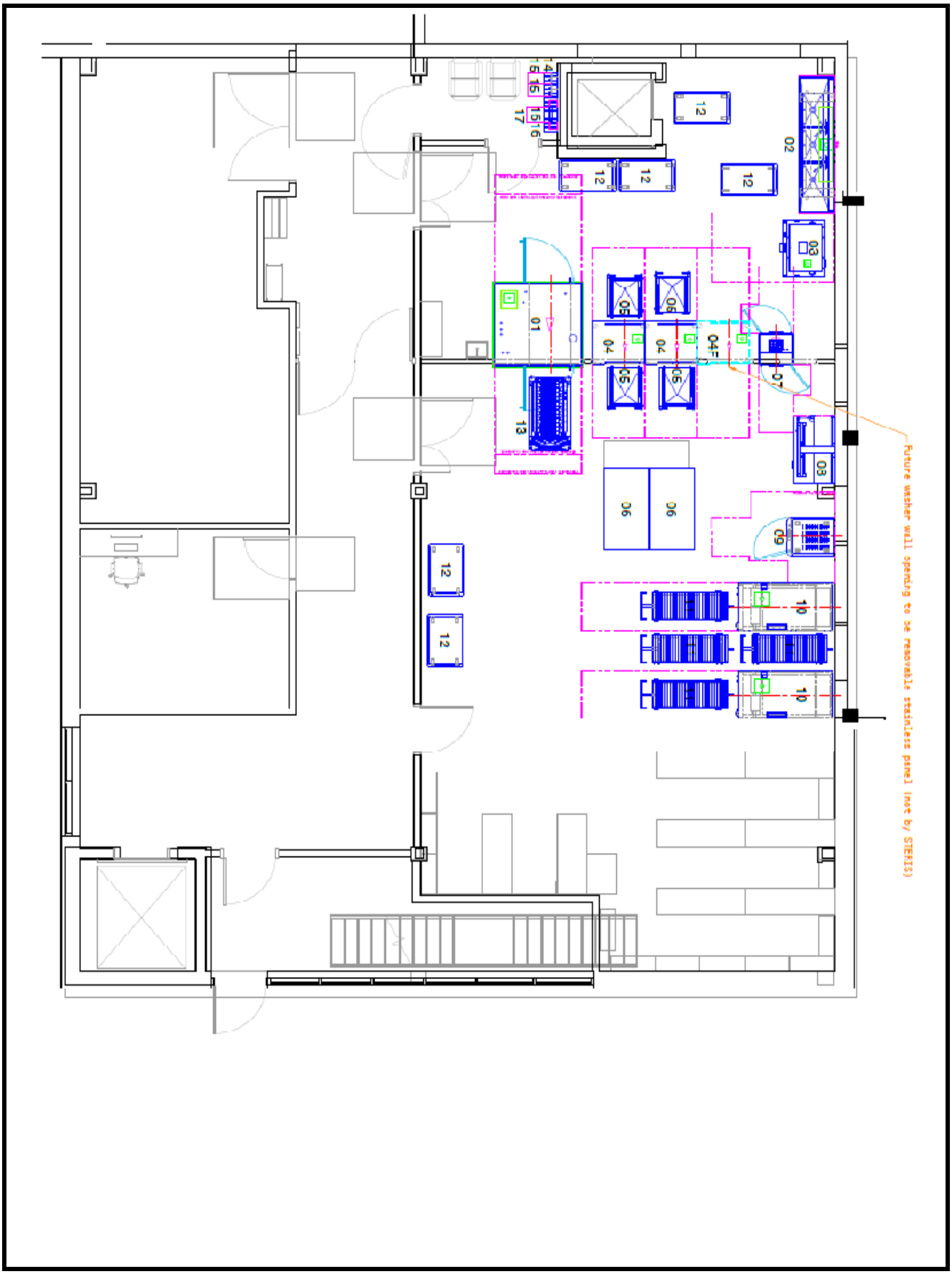

901 Montgomery Street
Decorah, IA 52101

PHONE 563-382-2911
FAX 563-387-3102

WinnMed

REVISION: F	ECN #: 106432	REVISION HISTORY	△ DEPICTS CHANGES FROM PRIOR REVISION

INDEX	DESCRIPTION OF CHANGE
1	SHEET 1- NOTE 2 ADDED MINIMUM. NOTE 4 CHANGED 300 TO 304
2	SHEET 3- CHANGED UTILITY REQUIREMENTS FROM 1/2" NPSM TO 3/8" COMPRESSION (2 PLACES)
3	SHEET 3- CHANGED UTILITY REQUIREMENTS FROM QUICK CONNECTOR FLEX COIL TO 3/8" COMPRESSION
4	SHEET 3- CHANGED UTILITY REQUIREMENTS FROM 1/2" NPSM WITH ...ADAPTER (INCLUDED)C TO 1/2" NPT
5	SHEET 3- CHANGED UTILITY REQUIREMENTS FROM 1/4" NPFT HOSE INCLUDED TO 1/4" NPT
6	SHEET 3- CHANGED NOTE 5 FROM "PREVENTED" TO "PREVENTION"
7	SHEET 4- CHANGED WALL AND FLOOR VIEW DRAIN DETAILS AND NOTES
8	SHEET 4- MOVED SEISMIC ANCHOR VIEW TO SHEET 6
9	SHEET 6- ADDED NOTE 2

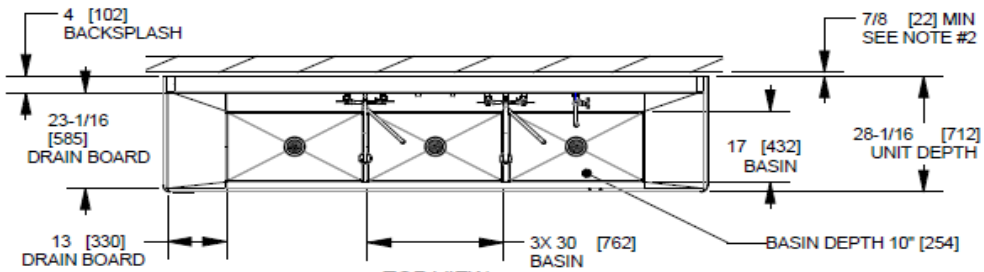

TOP VIEW

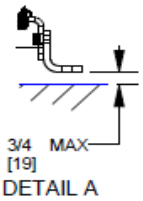

DETAIL A

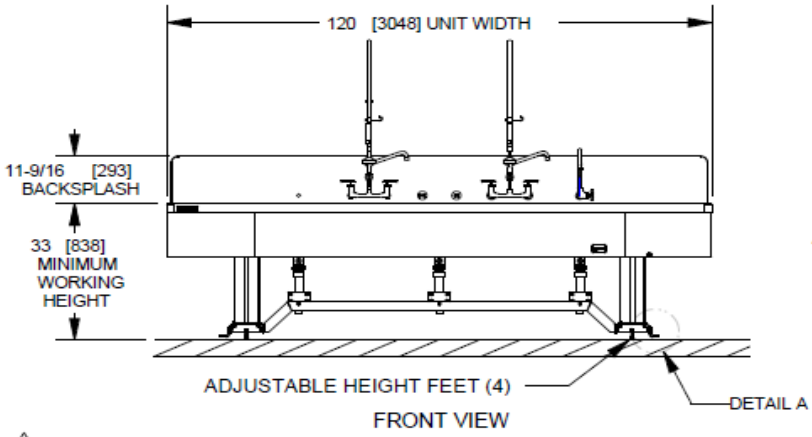

FRONT VIEW

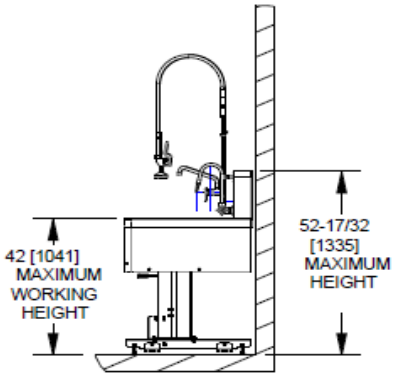

RIGHT SIDE VIEW
SHOWN AT
MAX HEIGHT

NOTES:
1. UNLESS OTHERWISE NOTED, ALL DIMENSIONS ARE IN INCHES [MM].
2. INSTALLER MUST MAINTAIN A MINIMUM GAP OF .875" TO ALL ADJACENT WALLS AS PINCH POINT PROTECTION. (F)
3. UNIT TO BE INSTALLED AGAINST A WALL, FOR BACK TO BACK INSTALLATION A PONY WALL IS REQUIRED.
4. 304 SERIES STAINLESS STEEL CONSTRUCTION. (F)
5. PONY WALL HEIGHT MUST BE 53"[1346].
6. WALL MUST BE FREE OF OBSTRUCTIONS TO 54"[1372].

STERIS Corporation

TITLE: 3 BASIN 120" ADJUSTABLE HEIGHT REPROCESSING SINK

SIZE:	SCALE:	DRAWN BY:	DRAWING NUMBER:	PART NUMBER:	REVISION:
A	1.000	Kosir, Joe	SINK50120 F.7	11002996	F

This document contains confidential and proprietary information of STERIS Corporation. Neither this document nor the information herein are to be reproduced, either in part or in whole, except as specifically authorized by STERIS Corporation.

SHEET 1 OF 6

901 Montgomery Street
Decorah, IA 52101

PHONE 563-382-2911
FAX 563-387-3102

WinnMed

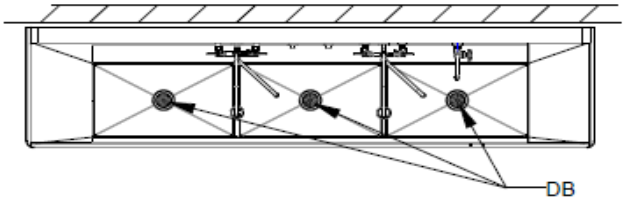

HW	HOT WATER
CW	COLD WATER
PW	PURE WATER
WG	WATER GUN
A	COMPRESSED AIR
DB	DRAIN BASKET (BASIN)
D	DRAIN

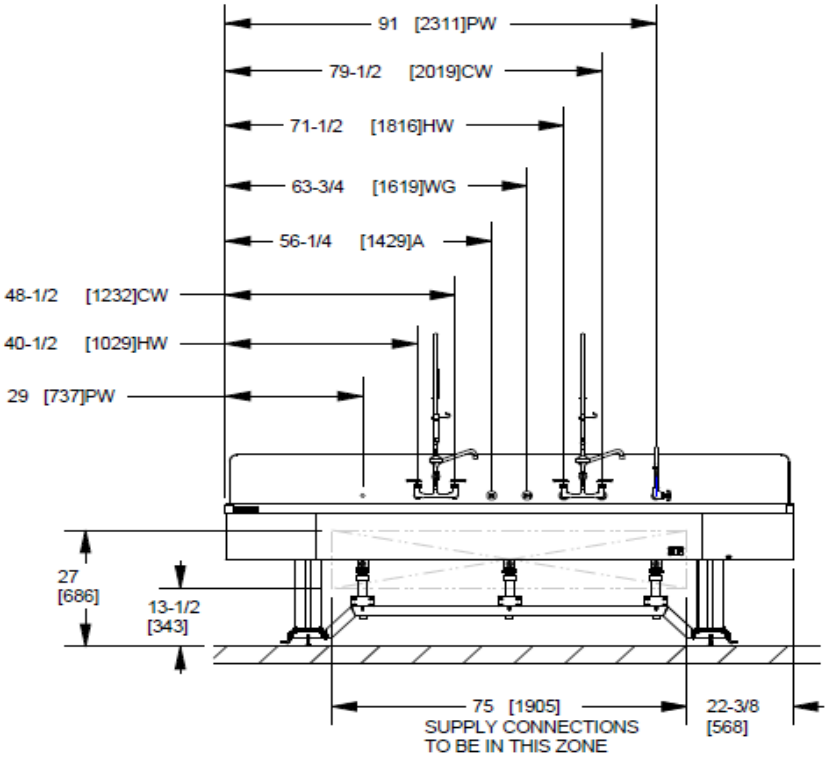

FRONT VIEW

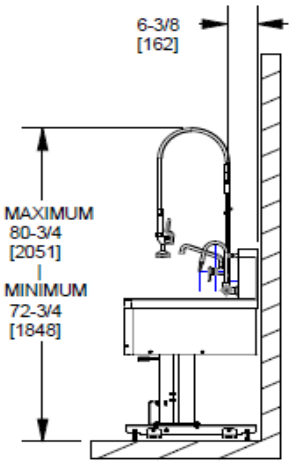

RIGHT SIDE VIEW
SHOWN AT
MAX HEIGHT

NOTE: WORKFLOW CAN BE REVERSED BY MOVING PURE WATER FAUCET
FROM RIGHT SIDE TO HOLE ON LEFT THAT IS CAPPED.
ADDITIONALLY THE COMPRESSED AIR AND WATER GUN FIXTURES SHOULD BE SWAPPED.

STERIS Corporation

TITLE: 3 BASIN 120" ADJUSTABLE HEIGHT REPROCESSING SINK

SIZE:	SCALE:	DRAWN BY:	DRAWING NUMBER:	PART NUMBER:	REVISION:
A	1.000	Kosir, Joe	SINK50120 F.7	11002996	F

This document contains confidential and proprietary information of STERIS Corporation. Neither this document nor the information herein are to be reproduced, either in part or in whole, except as specifically authorized by STERIS Corporation.

SHEET 2 OF 6

901 Montgomery Street
Decorah, IA 52101

PHONE 563-382-2911
FAX 563-387-3102

WinnMed

ADJ. HEIGHT PROCESSING TRIPLE SINK 120" X 28" X 33"-41"			
UTILITY REQUIREMENTS CHART (PLUMBING)			
UTILITY	PARAMETER	REQUIREMENT	NOTES
HOT WATER (HW)	CONNECTION TYPE/SIZE	3/8" COMPRESSION	F
	PRESSURE RANGE	15 TO 125 PSI	
	OPERATING FLOW RATE	1.6 GPM @ MAX PSI	
	TEMPERATURE RANGE	40° F TO 180° F	
	WATER QUALITY	SEE NOTE #2	F
COLD WATER (CW)	CONNECTION TYPE/SIZE	3/8" COMPRESSION	
	PRESSURE RANGE	15 TO 125 PSI	
	OPERATING FLOW RATE	1.6 GPM @ MAX PSI	
	TEMPERATURE RANGE	70° F MAX	
	WATER QUALITY	SEE NOTE #2	
PURE WATER (PW)	CONNECTION TYPE/SIZE	1/2" NPT	F
	PRESSURE RANGE	20 TO 125 PSI	
	OPERATING FLOW RATE	.25 TO 2.00 GPM ±15%	
	TEMPERATURE RANGE	40° F TO 140° F	
	WATER QUALITY		
WATER GUN (WG)	CONNECTION TYPE/SIZE	3/8" COMPRESSION	F
	PRESSURE RANGE	0 TO 44 PSI	
	OPERATING FLOW RATE		
	TEMPERATURE RANGE	40° F TO 125° F	F
	WATER QUALITY	SEE NOTE #2	
AIR GUN (A)	CONNECTION TYPE/SIZE	1/4" NPT	CONNECTION MUST BE MADE PER LOCAL CODE
	PRESSURE	30 PSI MAX	
	TIP 1	CONSUMPTION AT 30 PSI	2 SCFM
	TIP 2		
	TIP 3		
	TIP 4		
	TIP 5		
	TIPS 4 & 5 MUST BE OPERATED AT 30 PSI OR LESS TO COMPLY WITH OSHA DIRECTIVE		
BASIN DRAIN (BD)	CONNECTION TYPE	Ø 1-1/2" ABS P-TRAP (INCLUDED) Ø 2" COPPER P-TRAP (ACCESSORY)	DRAIN RATE AT 20 GPM EACH BASIN (ESTIMATED)

NOTES:
1. SUPPLY LINES FOR EACH CONNECTION ARE SHIPPED WITH EACH SINK.
2. STERIS RECOMMENDS THE FOLLOWING WATER QUALITY PARAMETERS:
   1. 100-200 PPM (500PPM MAX) TOTAL DISOLVED SOLIDS.
   2. 70-120 PPM (180PPM MAX) TOTAL ALKALINITY.
   3. 6.8-7.0PH (7.5 MAX).
   4. 0.1-0.5PPM (1.0PPM MAX) TOTAL SILICA.
3. STERIS DOES NOT SUPPLY A PRESSURE REGULATOR FOR USE WITH AIR GUN.
4. STERIS DOES NOT SUPPLY A PRESSURE REDUCING VALVE FOR USE WITH WATER GUN.
5. BACK FLOW PREVENTION BY CUSTOMER AGAINST BACK SIPHONAGE MAY BE REQUIRED (CHECK LOCAL PLUMBING CODE). (F)
6. FLOOR SINK OUTLET NEEDS TO BE ABLE TO ACCOMODATE WASTE FROM ALL BAYS (CHECK LOCAL PLUMBING CODE).
7. REFERENCES FOR PARAMETERS ARE TO MANUFACTURER'S RECOMMENDATION AND SHOULD BE FOLLOWED ACCORDINGLY.

STERIS Corporation

TITLE: 3 BASIN 120" ADJUSTABLE HEIGHT REPROCESSING SINK

SIZE:	SCALE:	DRAWN BY:	DRAWING NUMBER:	PART NUMBER:	REVISION:
A	1.000	Kosir, Joe	SINK50120 F.7	11002996	F

This document contains confidential and proprietary information of STERIS Corporation. Neither this document nor the information herein are to be reproduced, either in part or in whole, except as specifically authorized by STERIS Corporation.

SHEET 3 OF 6

901 Montgomery Street
Decorah, IA 52101

PHONE 563-382-2911
FAX 563-387-3102

WinnMed

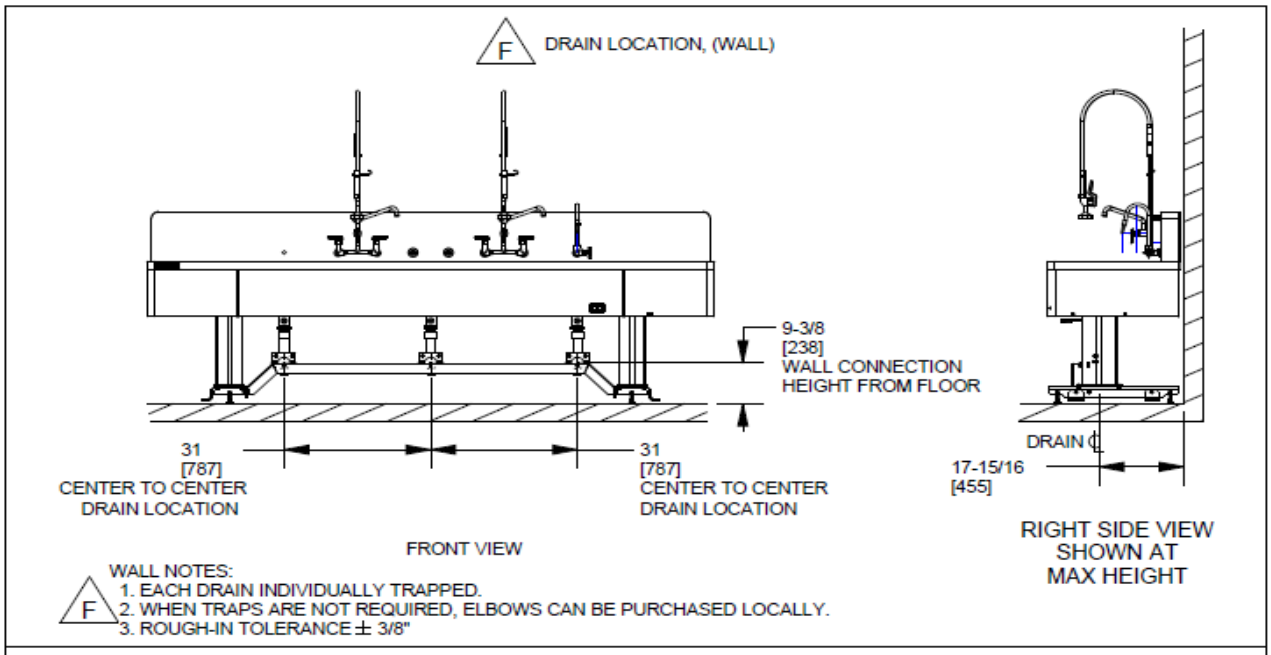

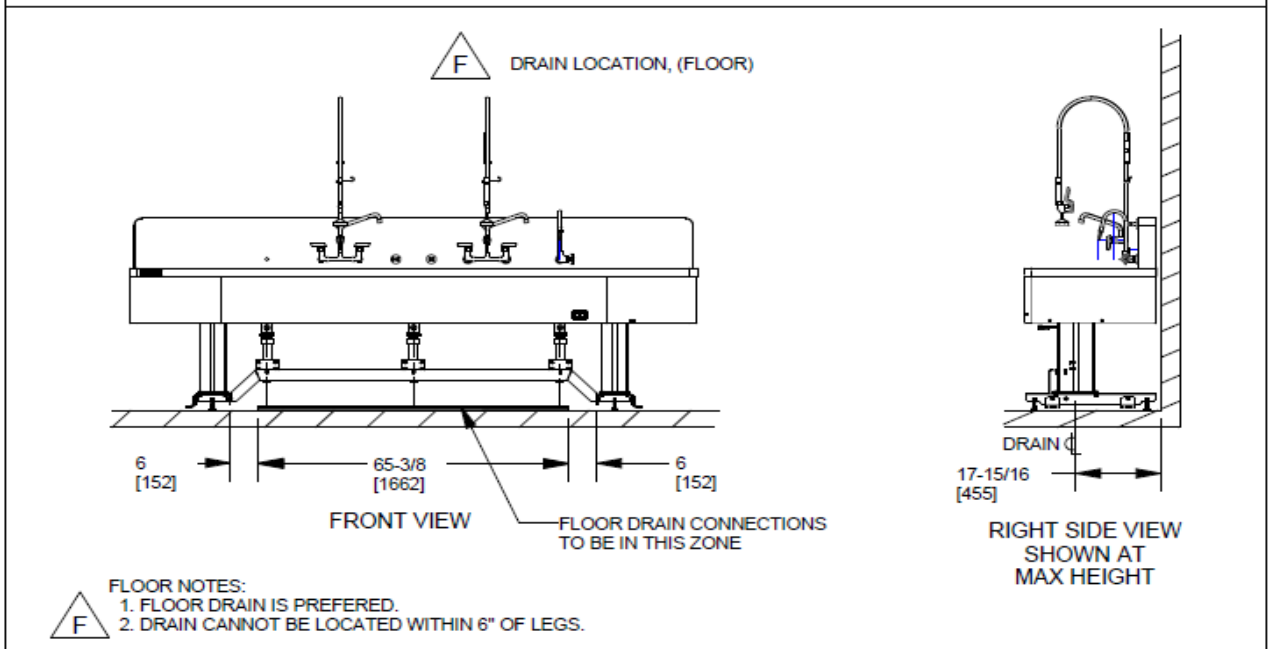

STERIS Corporation

TITLE: 3 BASIN 120" ADJUSTABLE HEIGHT REPROCESSING SINK

SIZE:	SCALE:	DRAWN BY:	DRAWING NUMBER:	PART NUMBER:	REVISION:
A	1.000	Kosir, Joe	SINK50120 F.7	11002996	F

This document contains confidential and proprietary information of STERIS Corporation. Neither this document nor the information herein are to be reproduced, either in part or in whole, except as specifically authorized by STERIS Corporation.

SHEET 4 OF 6

901 Montgomery Street
Decorah, IA 52101

PHONE 563-382-2911
FAX 563-387-3102

WinnMed

UTILITY (ELECTRICITY)
CONNECTION POSITION
RECOMMENDED

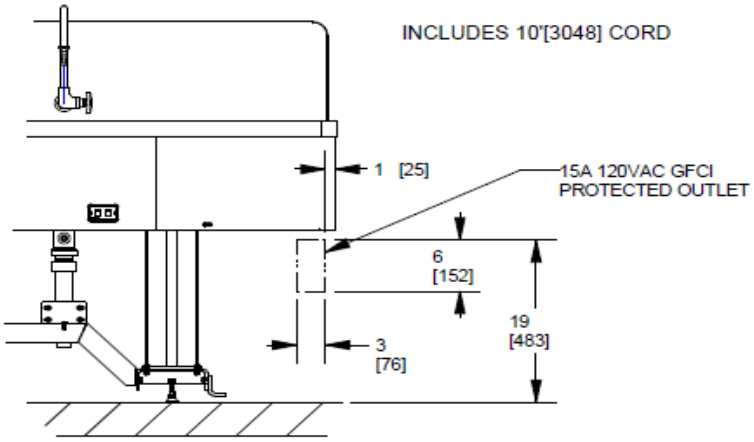

PARTIAL FRONT VIEW

ADJ. HEIGHT REPROCESSING TRIPLE SINK 120" X 28" X 33" TO 41"			
UTILITY SPECIFICATIONS CHART (ELECTRICAL)			
ELECTRICITY			
UTILITY	PARAMETER	REQUIREMENT	NOTES
ELECTRICITY	120V	15A GFCI PROTECTED OUTLET	
LINAK DL2 LIFT SYSTEM			
LINAK DL2 LIFT SYSTEM	WEIGHT CAPACITY	562LBS [2500 N] EACH	
	ADJUSTMENT RANGE	8.0" [203,2]	
	LIFT SPEED	UP TO 3/8"[10] PER SECOND	
	VOLTAGE	120VAC, 3A	WITH OVERLOAD PROTECTION

STERIS Corporation

TITLE: 3 BASIN 120" ADJUSTABLE HEIGHT REPROCESSING SINK

SIZE:	SCALE:	DRAWN BY:	DRAWING NUMBER:	PART NUMBER:	REVISION:
A	1.000	Kosir, Joe	SINK50120 F.7	11002996	F

This document contains confidential and proprietary information of STERIS Corporation. Neither this document nor the information herein are to be reproduced, either in part or in whole, except as specifically authorized by STERIS Corporation.

SHEET 5 OF 6

901 Montgomery Street
Decorah, IA 52101

PHONE 563-382-2911
FAX 563-387-3102

WinnMed

SEISMIC ANCHOR HOLE POSITIONS

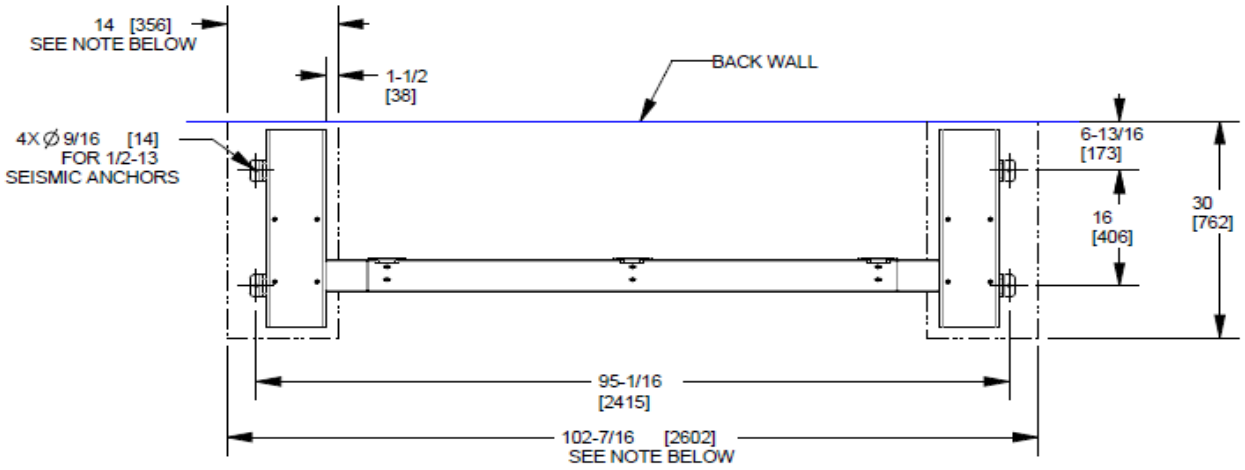

NOTE:
1. CONCRETE FLOOR MUST REMAIN FREE OF DEFECTS IN THESE AREAS FOR INSTALLATION OF SEISMIC ANCHORS (NOT PROVIDED BY STERIS).
2. REFER TO EQUIPMENT SPECIFIC SEISMIC DRAWING FOR MORE INFORMATION.

F

PHYSICAL SPECIFICATIONS	
SHIPPING DIMENSIONS L X W X H	132L X 36W X 48H
SHIPPING WEIGHT	690 LBS
OPERATING DIMENSIONS L X W X H	120" X 28" X 44-9/16" TO 52-9/16" [3048 X 711 X 1132 TO 1412]
OPERATING WEIGHT EMPTY	490 LBS
WORKING HEIGHT	33"[838] TO 41"[1041]

STERIS Corporation

TITLE: 3 BASIN 120" ADJUSTABLE HEIGHT REPROCESSING SINK

SIZE:	SCALE:	DRAWN BY:	DRAWING NUMBER:	PART NUMBER:	REVISION:
A	1.000	Kosir, Joe	SINK50120 F.7	11002996	F

This document contains confidential and proprietary information of STERIS Corporation. Neither this document nor the information herein are to be reproduced, either in part or in whole, except as specifically authorized by STERIS Corporation.

SHEET 6 OF 6

901 Montgomery Street
Decorah, IA 52101

PHONE 563-382-2911
FAX 563-387-3102

WinnMed

WinnMed **Issue Date:** **3/6/2024**
Expansion and Renovation
Decorah, IA 52101
Furniture Specifications

CONTACT: Ben Stevens - CFO
PHONE NUMBER: 563-387-3109

ITEM NUMBER:	3

ITEM NAME:	InnoWave ProSonic Irrigator		
ROOM NUMBER:		**QUANTITY:**	

SPECIFICATION INFORMATION

MANUFACTURER: Steris
MODEL #: IWPRO60
DIMENSIONS: 50" W x 36" D x 43.5" H
DESCRIPTION: Ultrasonic cleaning w/ up to 60 lumened devices or 66 lbs instrament capacity; multiple cycle phases, air-purge; elevator loading/unloading; touch-screen control panel

FURNITURE & EQUIPMENT IMAGE

901 Montgomery Street
Decorah, IA 52101

PHONE 563-382-2911
FAX 563-387-3102

WinnMed

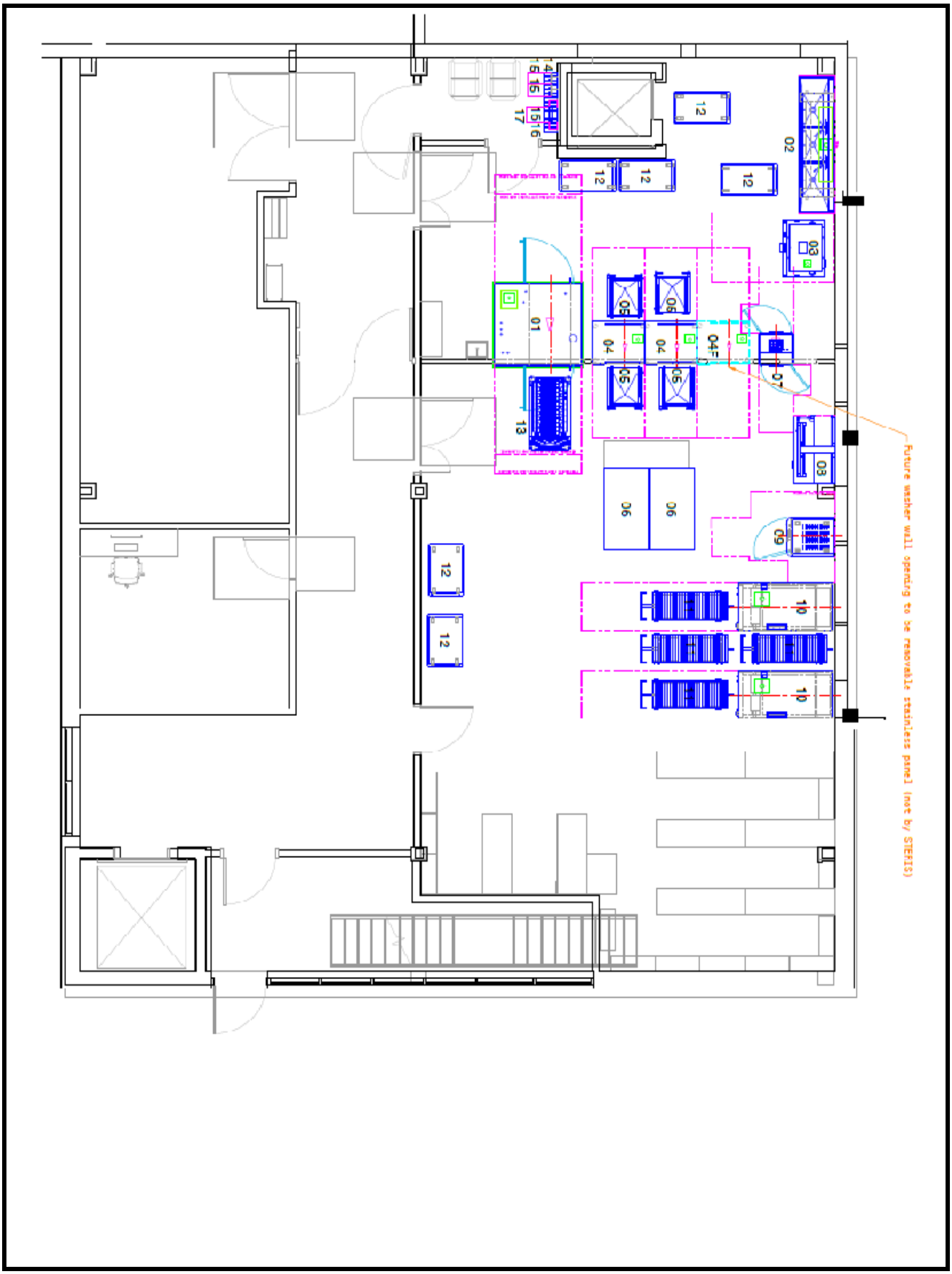

901 Montgomery Street
Decorah, IA 52101

PHONE 563-382-2911
FAX 563-387-3102

WinnMed

External Dimension

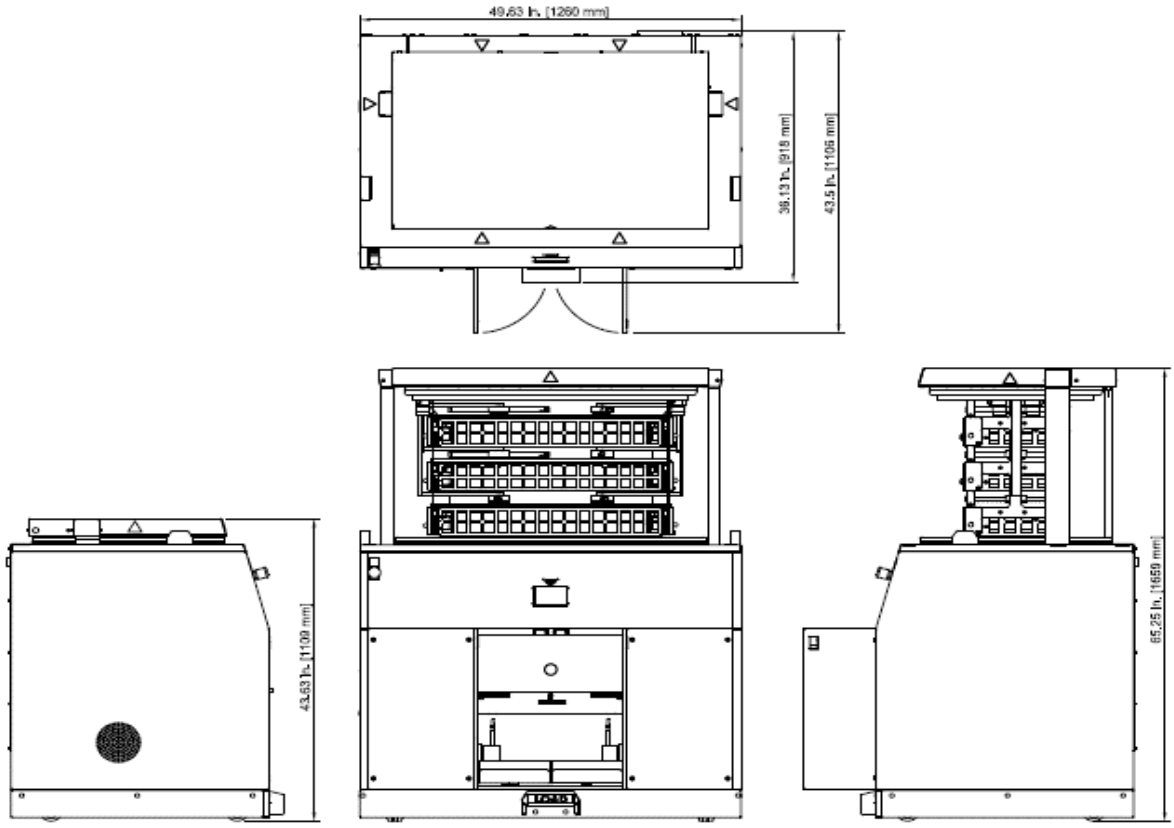

Physical dimensions and weight		
External height (lid closed)	43.6 in.	1109 mm
External height (lid open)	65.3 in.	1659 mm
External width	49.6 in.	1260 mm
External depth	36.1 in.	918 mm
Net weight (dry)	905 lbs	410 kg
Operating weight (tank filled)	380 lbs	172 kg
Max. operating weight (incl. filled tank, chemicals, and instruments to be cleaned)	1162 lbs	527 kg

STERIS Corporation

TITLE: InnoWave Pro, Equipment Specification Built after SN 11189855522 and up to 0922 2027900 and WITHOUT internal drain cooling.

SIZE:	SCALE:	DRAWN BY:	DRAWING NUMBER:	PART NUMBER:	REVISION:
A	NTS	TJ	11393356	11018262	D

This document contains confidential and proprietary information of STERIS Corporation. Neither this document nor the information herein are to be reproduced, either in part or in whole, except as specifically authorized by STERIS Corporation.

SHEET 1 OF 10

901 Montgomery Street
Decorah, IA 52101

PHONE 563-382-2911
FAX 563-387-3102

WinnMed

Suggested Clearances When Servicing Machine

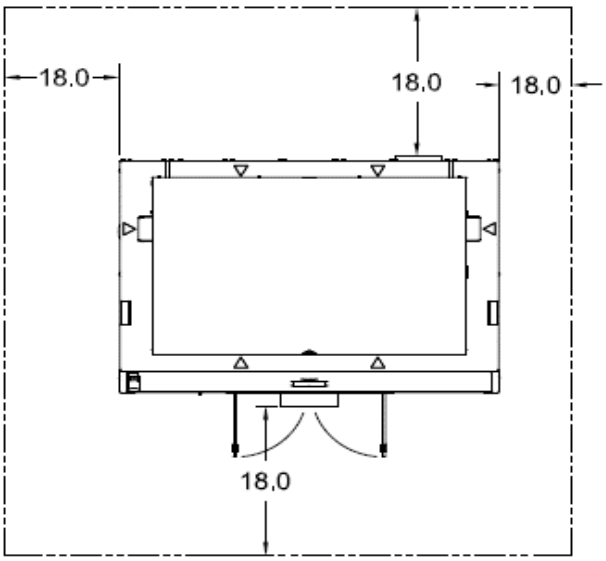

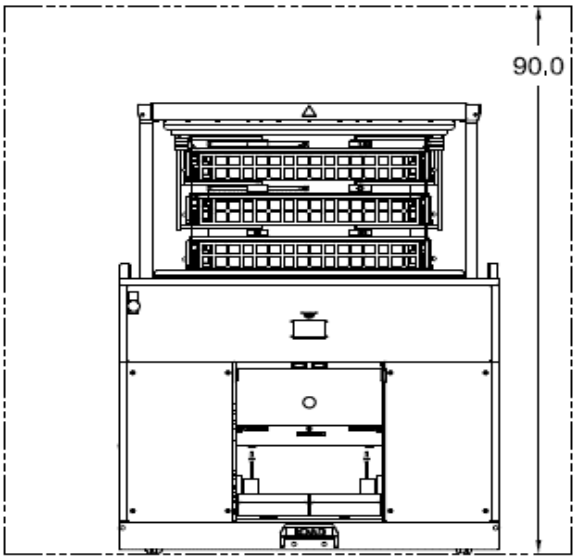

Notes:

1. Clearances are in INCHES
2. Machine should be moved to a position with minimum clearances shown for servicing.
3. Space for service clearances are not required while the unit is in the installed position.
4. Adequate space should be provided in the room for servicing the machine, so it can be wheeled or moved to accommodate servicing.
5. Reference other pages for installation clearances.

STERIS Corporation

TITLE	SIZE:	SCALE:	DRAWN BY:	DRAWING NUMBER:	PART NUMBER:	REVISION:
InnoWave Pro, Equipment Specification Built after SN 11189855522 and up to 0922 2027900 and WITHOUT Internal drain cooling.	A	NTS	TJ	11393356	11018262	D

This document contains confidential and proprietary information of STERIS Corporation. Neither this document nor the information herein are to be reproduced, either in part or in whole, except as specifically authorized by STERIS Corporation.

SHEET 1A OF 10

901 Montgomery Street
Decorah, IA 52101

PHONE 563-382-2911
FAX 563-387-3102

WinnMed

Utility Connections
REAR VIEW WITH LID CLOSED, SHOWING SERVICES

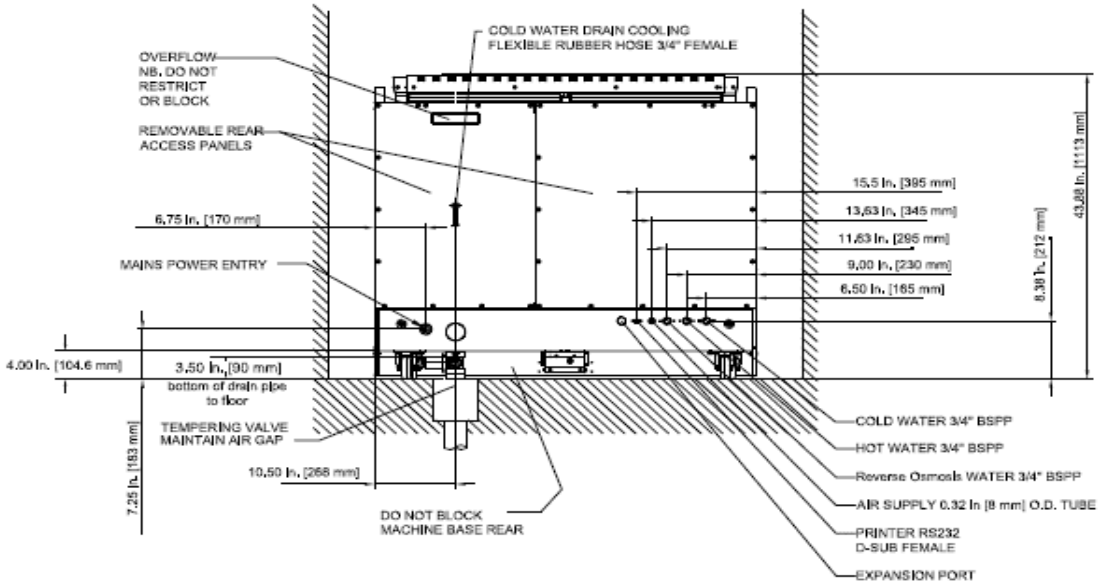

DRAIN OUTSIDE OF MACHINE'S FOOTPRINT
REAR VIEW WITH LID CLOSED

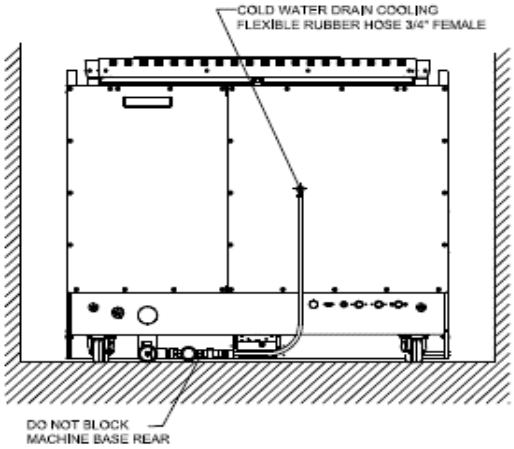

STERIS Corporation

TITLE: InnoWave Pro, Equipment Specification Built after SN 11189855522 and up to 0922 2027900 and WITHOUT Internal drain cooling.

SIZE:	SCALE:	DRAWN BY:	DRAWING NUMBER:	PART NUMBER:	REVISION:
A	NTS	TJ	11393356	11018262	D

This document contains confidential and proprietary information of STERIS Corporation. Neither this document nor the information herein are to be reproduced, either in part or in whole, except as specifically authorized by STERIS Corporation.

SHEET 2 OF 10

901 Montgomery Street
Decorah, IA 52101

PHONE 563-382-2911
FAX 563-387-3102

WinnMed

Installed Operation Clearances
DRAIN WITHIN OR OUTSIDE MACHINE'S FOOTPINT
FRONT VIEW WITH LID OPEN

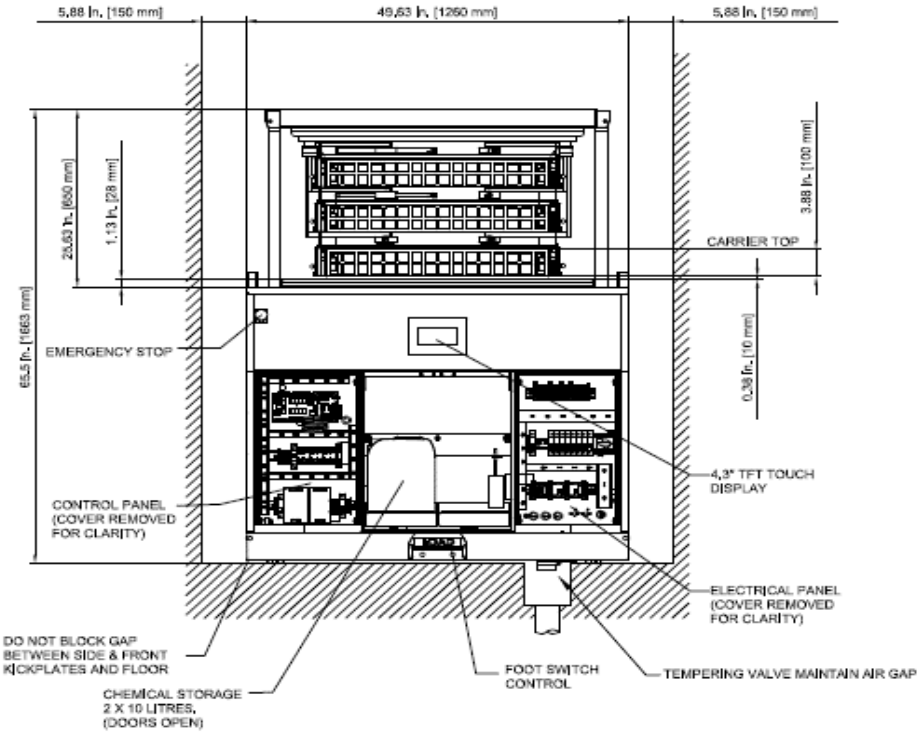

STERIS Corporation

TITLE: InnoWave Pro, Equipment Specification Built after SN 11189855522 and up to 0922 2027900 and WITHOUT Internal drain cooling.

SIZE:	SCALE:	DRAWN BY:	DRAWING NUMBER:	PART NUMBER:	REVISION:
A	NTS	TJ	11393356	11018262	D

This document contains confidential and proprietary information of STERIS Corporation. Neither this document nor the information herein are to be reproduced, either in part or in whole, except as specifically authorized by STERIS Corporation.

SHEET 3 OF 10

901 Montgomery Street
Decorah, IA 52101

PHONE 563-382-2911
FAX 563-387-3102

WinnMed

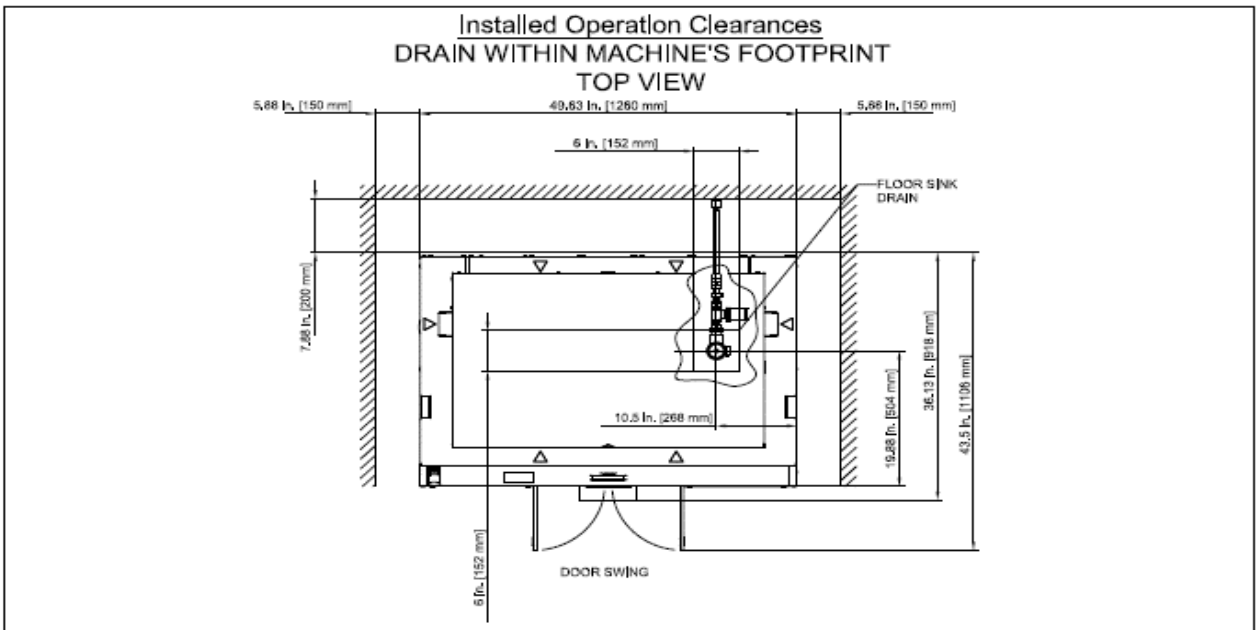

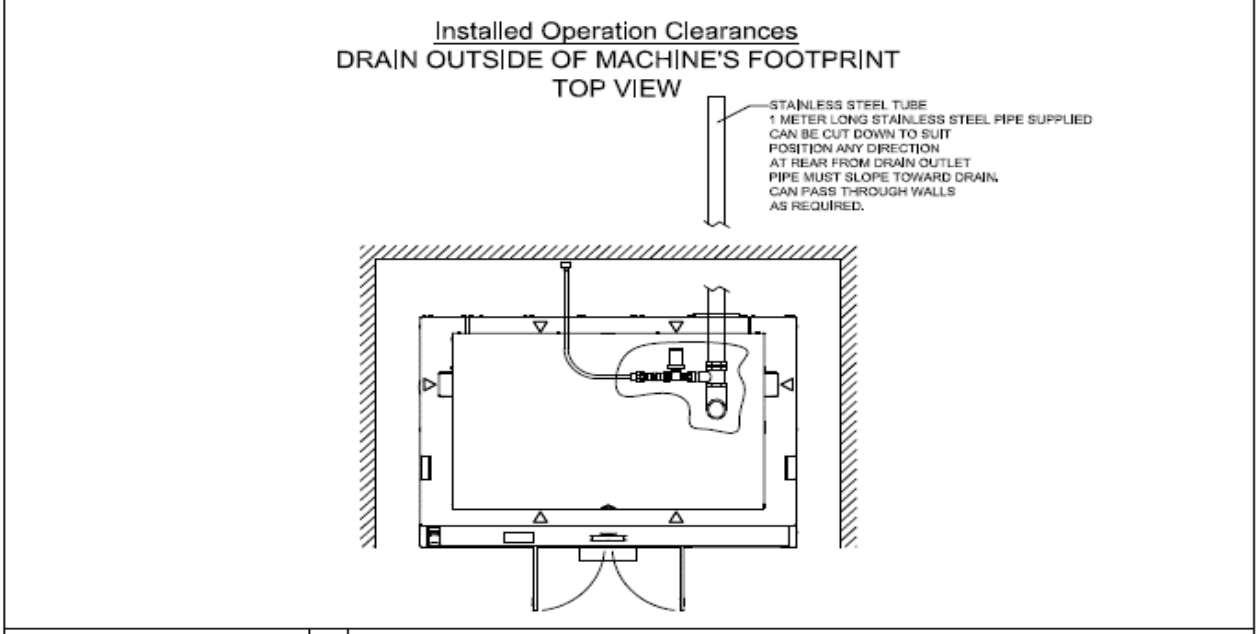

STERIS Corporation

TITLE: InnoWave Pro, Equipment Specification Built after SN 11189855522 and up to 0922 2027900 and WITHOUT Internal drain cooling.

SIZE:	SCALE:	DRAWN BY:	DRAWING NUMBER:	PART NUMBER:	REVISION:
A	NTS	TJ	11393356	11018262	D

This document contains confidential and proprietary information of STERIS Corporation. Neither this document nor the information herein are to be reproduced, either in part or in whole, except as specifically authorized by STERIS Corporation.

SHEET 4 OF 10

901 Montgomery Street
Decorah, IA 52101

PHONE 563-382-2911
FAX 563-387-3102

WinnMed

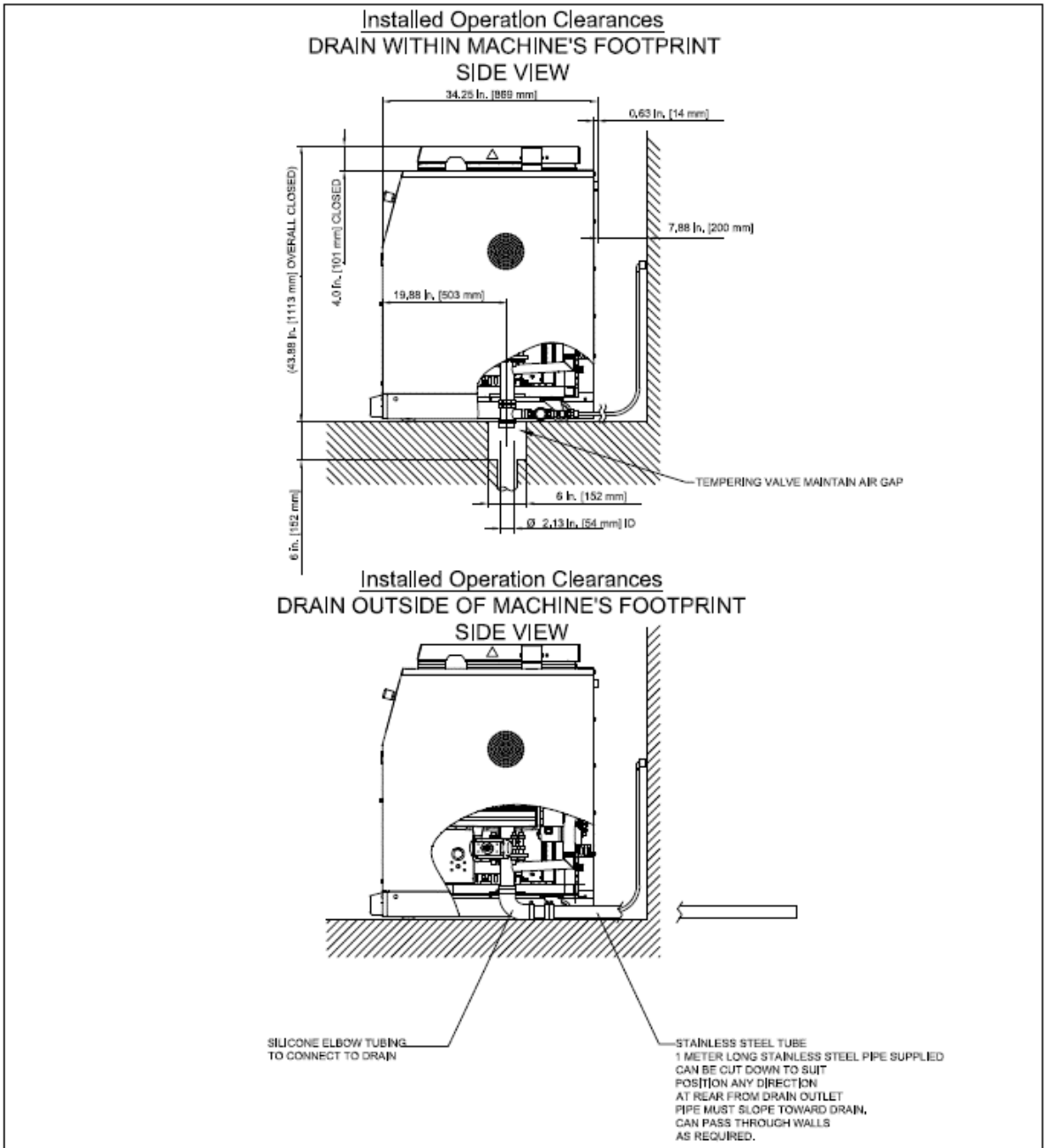

901 Montgomery Street
Decorah, IA 52101

PHONE 563-382-2911
FAX 563-387-3102

WinnMed

Installed Operation Clearances
DRAIN WITHIN MACHINE'S FOOTPRINT
SIDE VIEW

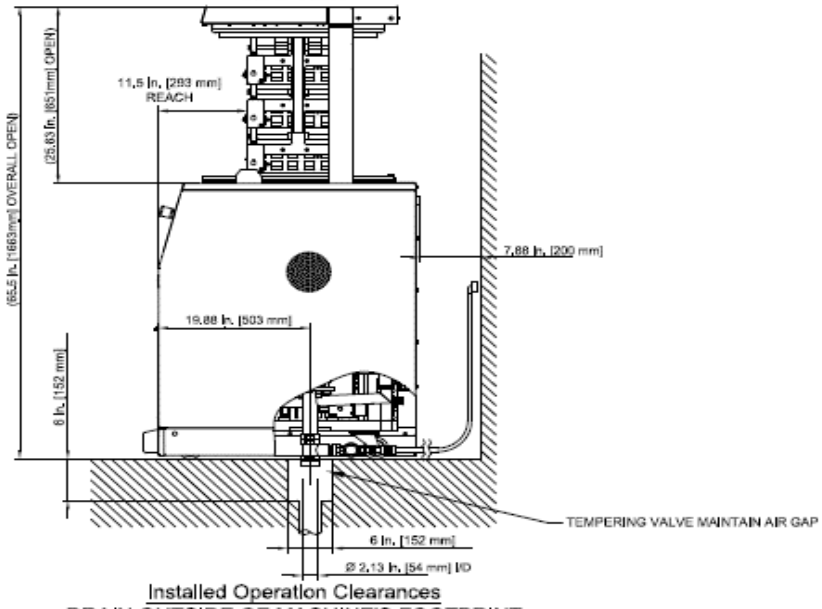

Installed Operation Clearances
DRAIN OUTSIDE OF MACHINE'S FOOTPRINT
SIDE VIEW

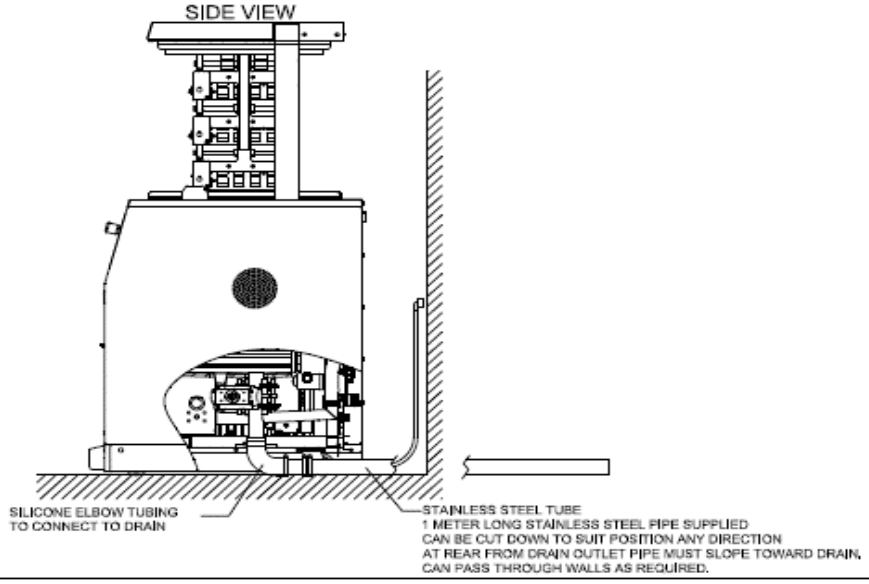

STERIS Corporation	TITLE	InnoWave Pro, Equipment Specification Built after SN 11189855522 and up to 0922 2027900 and WITHOUT Internal drain cooling.				
	SIZE: A	SCALE: NTS	DRAWN BY: TJ	DRAWING NUMBER: 11393356	PART NUMBER: 11018262	REVISION: D
This document contains confidential and proprietary information of STERIS Corporation. Neither this document nor the information herein are to be reproduced, either in part or in whole, except as specifically authorized by STERIS Corporation.						SHEET 6 OF 10

901 Montgomery Street
Decorah, IA 52101

PHONE 563-382-2911
FAX 563-387-3102

Water supply requirements:	
Water hardness (CaCO3), quality and purity, hot and cold supplies	< 125 ppm with water quality and purity tested and approved for disinfection as per ANSI/AAMI ST 15883-1:2009 (Item 6.4.1 and 6.4.2) or AAMI TIR 34
Pressure (hot and cold), Static	30 to 70 psi (2.0 to 5.0 Bar)
Flow rate (hot and cold)	3 to 8 gal/min. (11 to 30 litres/min.)
Temperature (hot and cold)	Cold: +41 to 86 °F (+5 to 30 °C) Hot: +122 to 176 °F (+50 to 80 °C)*
Connections	3/4 in. BSP male thread Rubber gasket is required. Do not use tape or any sealant, 3/4" NPT facility connections required. Hose connections will not work. Do not hard pipe water connections. Machine must be easily movable for service and maintenance.

*The unit is able to operate without hot water connection or with hot water supply cooler than recommended minimum temperature of +122 °F (+50 °C). Using only cold water or low-temperature hot water will result in longer cycle operation as water takes longer to heat up in unit.

Typical water consumption per wash

Water consumption will vary depending on volume of instruments loaded and temperature of inlet water supply. The water consumption below describes complete wash cycle at +104 °F (+40 °C), with no instruments loaded.

Maximum water consumption for complete wash cycle				
Stage	**Cold water**	**Hot water**	**RO Water ***	**Total for stage**
Pre-wash	10.6 gallons (40 litres)	nil	nil	10.6 gallons (40 litres)
Wash	1 gallon (3.7 litres)	65 gallons (246 litres)	nil	66 gallons (250 litres)
Rinse	10.6 gallons (40 litres)	nil	nil	10.6 gallons (40 litres)
Disinfection	10.6 gallons (40 litres)	nil	10.6 gallons (40 liters)	21.2 gallons (40 litres)
Disinfection Condensate	43.5 gallons (165 liters)	nil	nil	43.5 gallons (165 liters)
Cooling	28 gallons (105 liters)	nil	nil	28 gallons (105 liters)
Total water consumption	104.3 gallons (393 litres)	65 gallons 247 (litres)	10.6 gallons (40 liters)	180 gallons (681 litres) includes 38 gallons R.O.

*If RO is used, cold water is not used during disinfection

STERIS Corporation

TITLE: InnoWave Pro, Equipment Specification Built after SN 11189855522 and up to 0922 2027900 and WITHOUT internal drain cooling.

SIZE:	SCALE:	DRAWN BY:	DRAWING NUMBER:	PART NUMBER:	REVISION:
A	NTS	TJ	11393356	11018262	D

This document contains confidential and proprietary information of STERIS Corporation. Neither this document nor the information herein are to be reproduced, either in part or in whole, except as specifically authorized by STERIS Corporation.

901 Montgomery Street
Decorah, IA 52101

PHONE 563-382-2911
FAX 563-387-3102

WinnMed

Site drain requirements The site drain should meet the following requirements:	
Drain connection	2.125 in. (54 mm) outlet from unit. Drain must be fitted with suitable traps. Remote drain must slope to floor drain. Air gap must be maintained per local code. Do not hard pipe drain connection. The machine must be easily movable for service and maintenance.
Position	Unit should be positioned so that the centerline of the unit is aligned with the center of the floor sink outlet. If remote drain is used, drain line must be level or sloping away from unit. Remote drain also requires a floor sink. Adhere to local code.
Capacity	47.5 gallons/minute. (30 litres/minute) Maximum discharge to drain including overflow, (minimum drain capacity of 8 gallons/minute). When drain tempering valve is installed, maximum flow to drain is 8 gallons/minute including DTV cooling water flow rate.
Overflow Drain	Internally connected within the machine to the drain pipe, downstream of the drain valve. Maximum overflow drain is 8 gallons per minute.
Effluent temperature	up to +140 °F (+60 °C) Max. and +203 °F (+95 °C) without DTV kit. DTV is required in North America. Other locations refer to local or national codes.
Floor Sink Dimensions	6.0 in x 6.0 (152 mm x 152mm) in with a 3.0 in. (76 mm) minimum drain outlet at bottom of floor sink.
Compressed Air Supply	**Pressure**: 5.5 bar to 7.0 bar (80 to 100 psi). **Quality**: If medical grade compressed air is not used, and Eliminizer filter needs to be included at time of order. **Connection**: 8mm (0.315 in) dia. Quick fit hose connector. **Air Flow Rate:** 19SCFM.

STERIS Corporation

TITLE: InnoWave Pro, Equipment Specification Built after SN 11189855522 and up to 0922 2027900 and WITHOUT Internal drain cooling.

SIZE:	SCALE:	DRAWN BY:	DRAWING NUMBER:	PART NUMBER:	REVISION:
A	NTS	TJ	11393356	11018262	D

This document contains confidential and proprietary information of STERIS Corporation. Neither this document nor the information herein are to be reproduced, either in part or in whole, except as specifically authorized by STERIS Corporation.

901 Montgomery Street
Decorah, IA 52101

PHONE 563-382-2911
FAX 563-387-3102

The disconnect switch must;

- Isolate all poles simultaneously
- Be lockable in the off position
- Comply with standards IEC/EN 61058-1 and IEC 60447 (creepage and clearances for 4kV transient voltage)
- Be situated close to the equipment for ease of accessibility, and in a position where the operator can turn it off in an emergency without leaning over the machine.
- Marked as the disconnection device for this equipment
- Disconnect device off-position should be clearly marked (O) and the on-position should be marked (I)
- Hard wiring power cable to disconnect switch is recommended. Use of an electrical plug is not recommended.

Electrical connections		
Model	**Conductor**	**Color and Marking**
IWPRO60 (208 V AC 3P+PE) supplied with 6 ft (1.8 m) 4-core power cable.	Protective earth	Green/Yellow
	Live 1	Black 1
	Live 2	Black 2
	Live 3	Black 3

Electrical power supply requirements:	
Requirement	**Model**
	IWPRO60
Electrical supply voltage	200-230 V AC 3P+PE (Three-phase and protective earth) Frequency: 60 Hz
Supply current	Site Current Capacity Current Capacity: ≥48 A per phase Dedicated circuit is required with a minimum circuit breaker rating of 63A or greater. Refer to local codes
Electrical power requirement	18 kW
Allowable supply voltage fluctuation	±10% of nominal voltage
Over-voltage category II	Transient over-voltages typically present on mains supply

STERIS Corporation

TITLE: InnoWave Pro, Equipment Specification Built after SN 11189855522 and up to 0922 2027900 and WITHOUT Internal drain cooling.

SIZE:	SCALE:	DRAWN BY:	DRAWING NUMBER:	PART NUMBER:	REVISION:
A	NTS	TJ	11393356	11018262	D

This document contains confidential and proprietary information of STERIS Corporation. Neither this document nor the information herein are to be reproduced, either in part or in whole, except as specifically authorized by STERIS Corporation.

SHEET 9A OF 10

Electrical connections		
Model	**Conductor**	**Color and Marking**
IW532055NPR(380-415VAC 3P+N+PE) supplied with 9.84 ft (3 m) 5-core power cable	Protective earth	Green/Yellow
	Live 1	Brown
	Live 2	Black
	Live 3	Grey
	Neutral	Blue

Electrical power supply requirements:	
Requirement	**Model**
	IW532055NPR
Electrical supply voltage	380V-415V 3P+N+PE (Three-phase, neutral and protective earth) Frequency: 50 Hz
Supply current	Site Current Capacity: >33 A per phase Dedicated circuit is required with a circuit breaker rating of 40A or greater. Refer to local codes.
Electrical power requirement	22 kW
Allowable supply voltage fluctuation	±10% of nominal voltage
Over-voltage category II	Transient over-voltages typically present on mains supply

Typical power consumption per wash

Power consumption will vary depending on cycle settings and temperature of inlet water supply. The power consumption below describes complete wash cycle at +104 °F (+40 °C).

Maximum power consumption for complete wash cycle	
Phase	Power consumption kWh
Pre-wash	11.9
Wash	2.6
Rinse 1	0.6
Rinse 2	0.6
Disinfection	3.6
Total power consumption	9.3

STERIS Corporation

TITLE: InnoWave Pro, Equipment Specification Built after SN 11189855522 and up to 0922 2027900 and WITHOUT internal drain cooling.

SIZE:	SCALE:	DRAWN BY:	DRAWING NUMBER:	PART NUMBER:	REVISION:
A	NTS	TJ	11393356	11018262	D

This document contains confidential and proprietary information of STERIS Corporation. Neither this document nor the information herein are to be reproduced, either in part or in whole, except as specifically authorized by STERIS Corporation.

901 Montgomery Street
Decorah, IA 52101

PHONE 563-382-2911
FAX 563-387-3102

Operating / Working environment location requirements

General and environmental requirements

Proposed operating location for unit much meet or exceed following requirements

Description	Requirements
Operating surface	On level floor, capable of supporting a weight of at least 1200 lb (545 kg).
Location requirement Altitude	Indoors only, altitude up to 6562 ft (2000 m)
Ambient operating temperature range	+41 °F to 104 °F (+5 °C to 40 °C)
Maximum humidity	80% relative humidity for up to +88 °F (+31 °C) decreasing linearly to 50% relative humidity at +104 °F (+40 °C)
Site services	Within 6 ft (1.8 m) of electrical isolator. Within 6 ft (1.8 m) of hot and cold water connections. Within 3 ft (1.0 m) of external site drain for effluent.
Ambient lighting	500 lux (46.5 foot-candle) minimum room lighting
Noise generated during operation	69 dBA at distance of 6 ft (1.8 m) from front of unit
Heat output during operation	7200 BTU/hr during cycle

Shipping Information

Shipping crate dimensions and weight		
Shipping crate height	59.1 in.	1501 mm
Shipping crate width	59.5 in.	1511 mm
Shipping crate depth	45.3 in.	1151 mm
Shipping crate gross weight	1135 lb	515 kg

Transportation and storage:
Make sure package marking instructions and environmental conditions are always followed during transport and storage of InnoWave™ Pro.

Lifting:
Lifting and maneuvering the InnoWave™ Pro in shipping crate must be done with pallet truck or forklift truck able to carry load in excess of 1135 lb (515 kg).

Storage markings:
The markings on shipping crate stipulate unit's storage conditions and handling information.

STERIS Corporation

TITLE: InnoWave Pro, Equipment Specification Built after SN 11189855522 and up to 0922 2027900 and WITHOUT Internal drain cooling.

SIZE:	SCALE:	DRAWN BY:	DRAWING NUMBER:	PART NUMBER:	REVISION:
A	NTS	TJ	11393356	11018262	D

This document contains confidential and proprietary information of STERIS Corporation. Neither this document nor the information herein are to be reproduced, either in part or in whole, except as specifically authorized by STERIS Corporation.

SHEET 10 OF 10

WinnMed

WinnMed **Issue Date:** **3/6/2024**
Expansion and Renovation
Decorah, IA 52101
Furniture Specifications

CONTACT: Ben Stevens - CFO
PHONE NUMBER: 563-387-3109

ITEM NUMBER:	4

ITEM NAME:	Rack Washer/Disinfector		
ROOM NUMBER:		**QUANTITY:**	

SPECIFICATION INFORMATION	
MANUFACTURER:	Steris
MODEL #:	FH19042
DIMENSIONS:	42" W x 40" D x 80.75" H
DESCRIPTION:	Washer/Disinfector, 460-480V, 3 Phase, 60 Hz, Steam heated, 15 DIN/10 US tray capacity; daVinci instrument compatible

FURNITURE & EQUIPMENT IMAGE

901 Montgomery Street
Decorah, IA 52101

PHONE 563-382-2911
FAX 563-387-3102

WinnMed

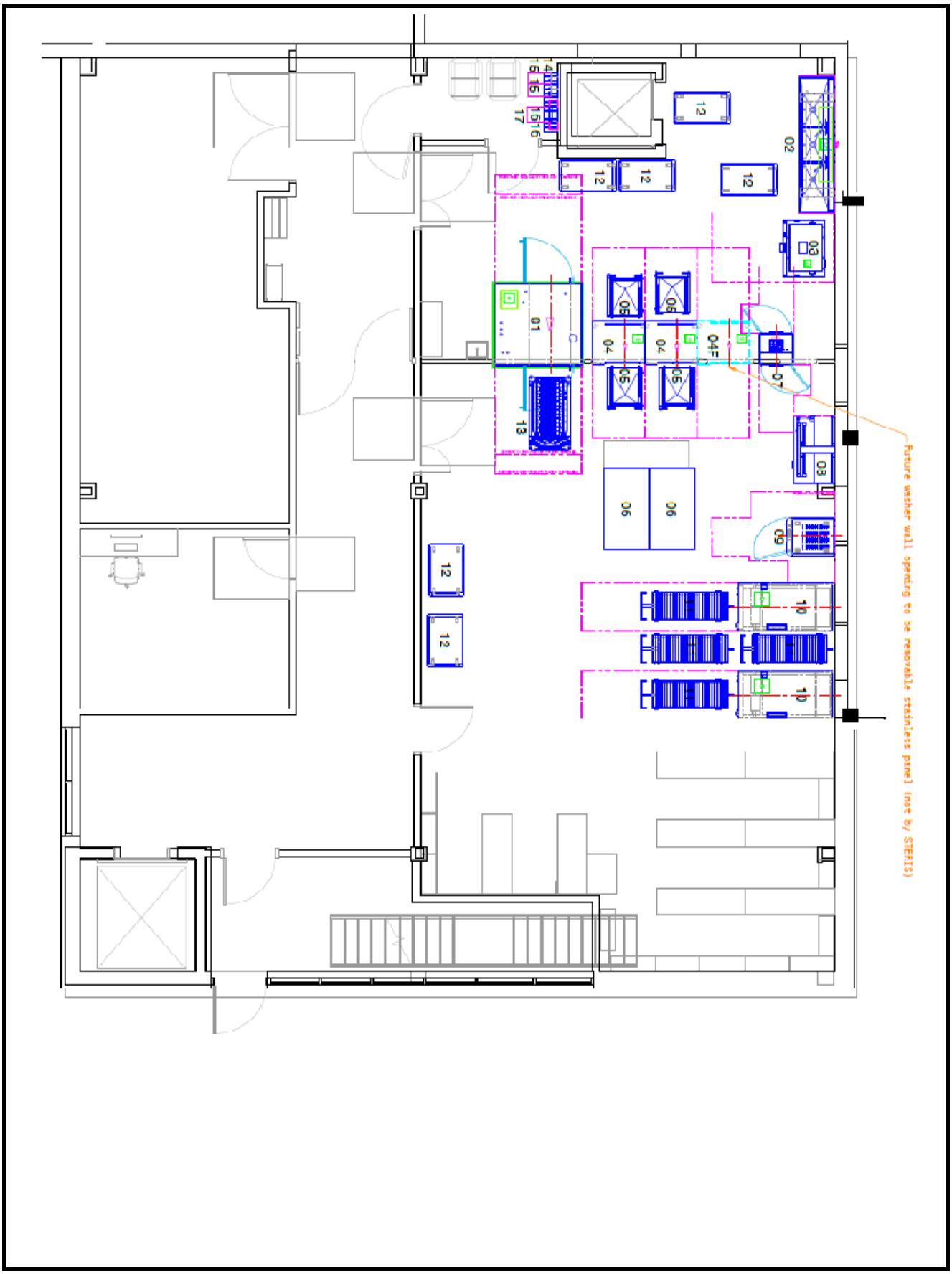

901 Montgomery Street
Decorah, IA 52101

PHONE 563-382-2911
FAX 563-387-3102

WinnMed

Released

TYPICAL INSTALLATION

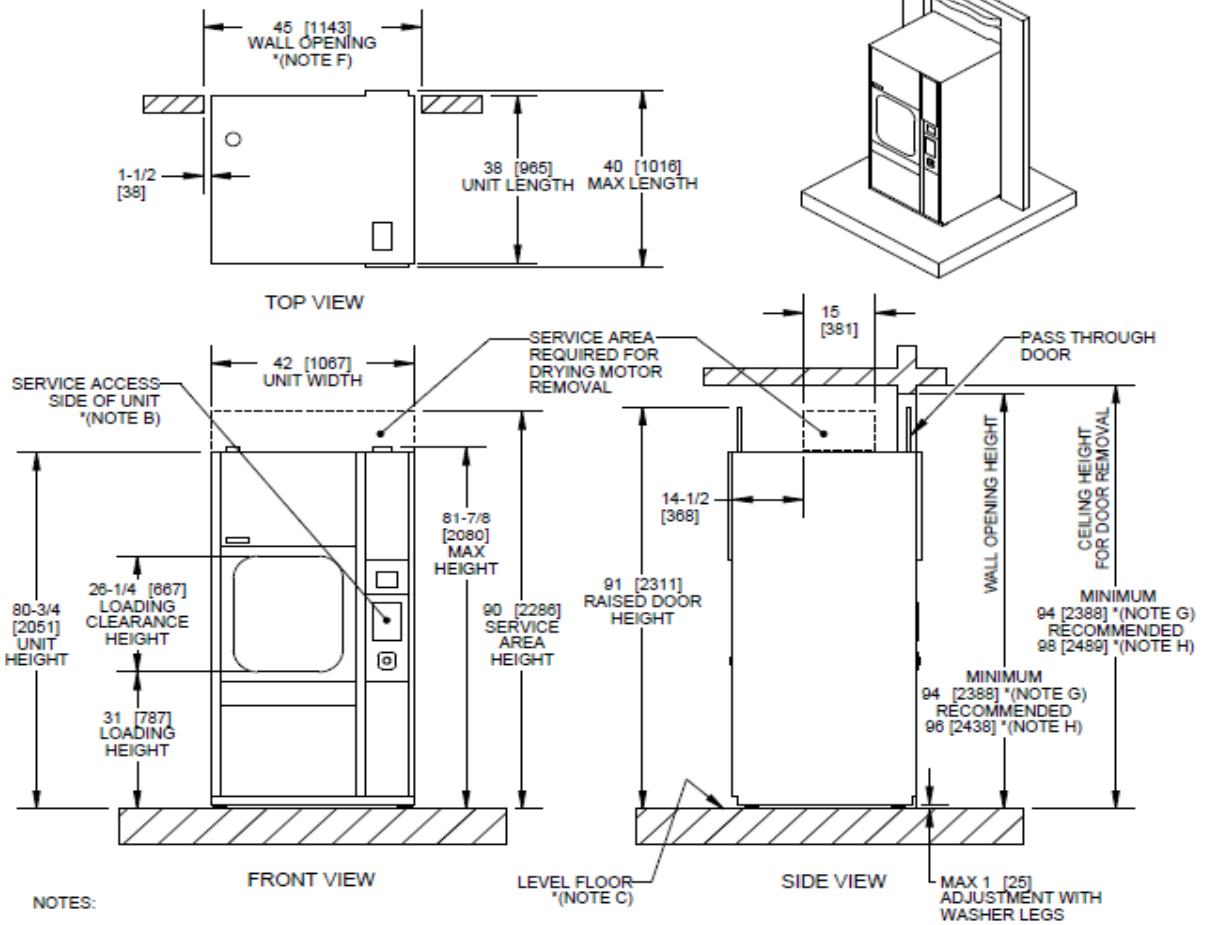

NOTES:

(A) UNLESS OTHERWISE SPECIFIED, ALL DIMENSIONS ARE IN INCHES [mm].
(B) SERVICE ACCESS SIDE OF UNIT IS RECOGNIZED BY THE TOUCH SCREEN AT THE RIGHT OF WASH CHAMBER. ELECTRICAL AND CONTROL COMPONENTS, AS WELL AS MOST OF SERVICABLE PARTS ARE ACCESSIBLE FROM THAT SIDE OF UNIT. NON-SERVICE SIDE IS EQUIPPED WITH THE TOUCH SCREEN ON THE LEFT OF THE WASH CHAMBER.
(C) CUSTOMER MUST BE SURE THAT MACHINE STANDS ON A NON-COMBUSTIBLE FLOOR.
(D) WEIGHTED EQUIVALENT SURFACE SOUND PRESSURE LEVEL: 64.0 dB(A) CALCULATED AS DESCRIBED IN ISO 3746.
(E) VERTICAL BARRIER WALL FLANGES ARE PROVIDED WITH UNIT TO FILL GAP BETWEEN UNIT AND WALL ON BOTH SIDES. DIMENSIONS ARE 3-1/2 in [89 mm] WIDTH X 80 in [2032 mm] LONG.
(F) HORIZONTAL BARRIER WALL FLANGES ARE PROVIDED WITH UNIT TO FILL GAP BETWEEN UNIT AND WALL ON BOTH SIDES. DIMENSIONS ARE 49 in [1245 mm] WIDTH X 16 in [406 mm] HEIGHT.
(G) MINIMUM REQUIRED DIMENSION FOR DOOR REMOVAL WITH LIMITED ADJUSTMENT AVAILABLE: +0 in [0 mm]
THE STANDARD BARRIER WALL FLANGES CAN'T BE USED AT THAT DIMENSION. -3/4 in [19.1 mm]
(H) RECOMMENDED DIMENSION FOR DOOR REMOVAL WITH FULL LEVELING ADJUSTMENT AVAILABLE: +1 in [25.4 mm]
THE STANDARD BARRIER WALL FLANGES CAN BE USED AT THAT DIMENSION. *(NOTE E AND F) -3/4 in [19.1 mm]

STERIS Corporation

TITLE: EQUIPMENT DRAWING OF AMSCO® 7053HP SINGLE-CHAMBER WASHER/DISINFECTOR STEAM HEATED, W/O ACU-RINSE RES., UNIT FLUSH TO WALL

SIZE:	SCALE:	DRAWN BY:	DRAWING NUMBER:	PART NUMBER & REVISION
A	N/A	Jean Tanguay	10288795	10288795.D

Page 1 of 10

This document contains confidential and proprietary information of STERIS Corporation. Neither this document nor the information herein are to be reproduced, either in part or in whole, except as specifically authorized by STERIS Corporation.

901 Montgomery Street
Decorah, IA 52101

PHONE 563-382-2911
FAX 563-387-3102

WinnMed

Released

SEISMIC MOUNTS

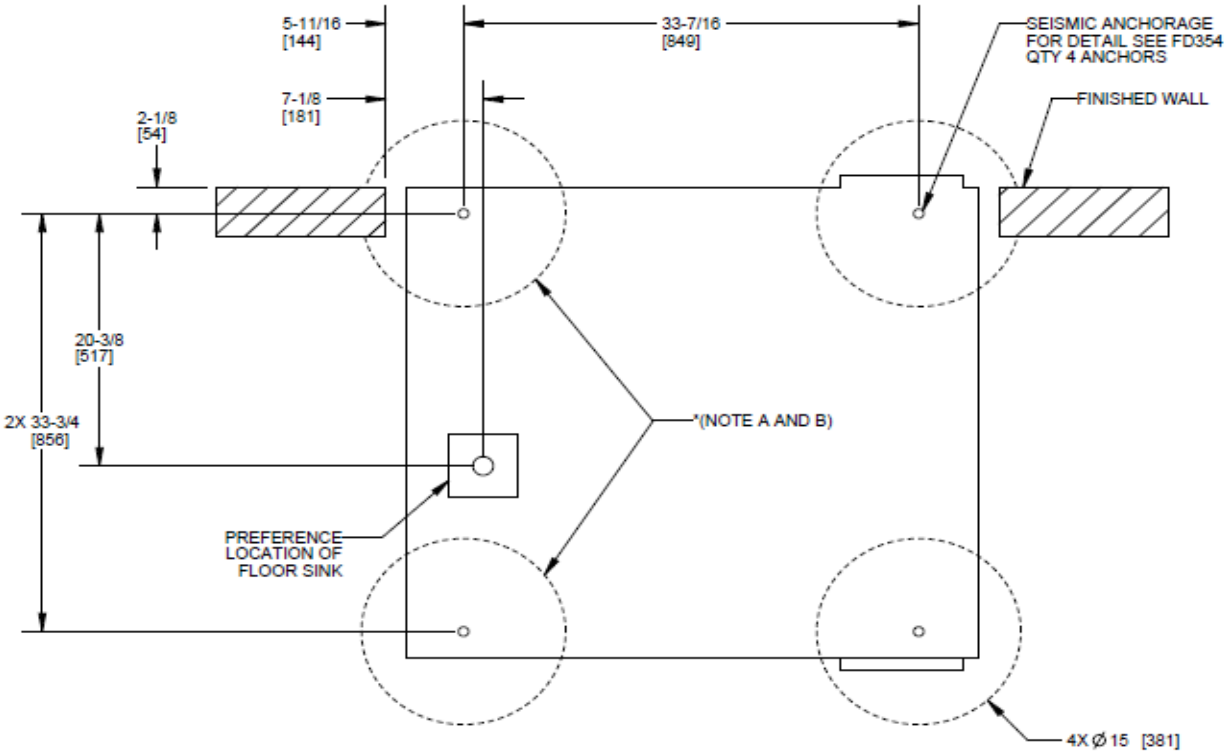

*NOTES:

(A) CONCRETE FLOOR MUST REMAIN FREE OF DEFECTS IN THESE AREA, AS PER ESR-1917 & ESR-3187. FOR INSTALLATION OF SEISMIC ANCHORS (NOT PROVIDED BY STERIS).
(B) THE FLOOR SINK AND DRAIN SHALL NOT OCCUPY THESE AREAS. 5 in x 5 in [127 mm x 127 mm] FLOOR SINK WITH Ø4 in [102 mm] DRAIN IS RECOMMENDED WHEN USING SEISMIC MOUNTS.

STERIS Corporation	TITLE	EQUIPMENT DRAWING OF AMSCO® 7053HP SINGLE-CHAMBER WASHER/DISINFECTOR STEAM HEATED, W/O ACU-RINSE RES., UNIT FLUSH TO WALL			
	SIZE: A	SCALE: N/A	DRAWN BY: Jean Tanguay	DRAWING NUMBER: 10288795	PART NUMBER & REVISION
Page 2 of 10					10288795.D

This document contains confidential and proprietary information of STERIS Corporation. Neither this document nor the information herein are to be reproduced, either in part or in whole, except as specifically authorized by STERIS Corporation.

901 Montgomery Street
Decorah, IA 52101

PHONE 563-382-2911
FAX 563-387-3102

WinnMed

Released

UTILITY (PLUMBING)
CONNECTION POSITION

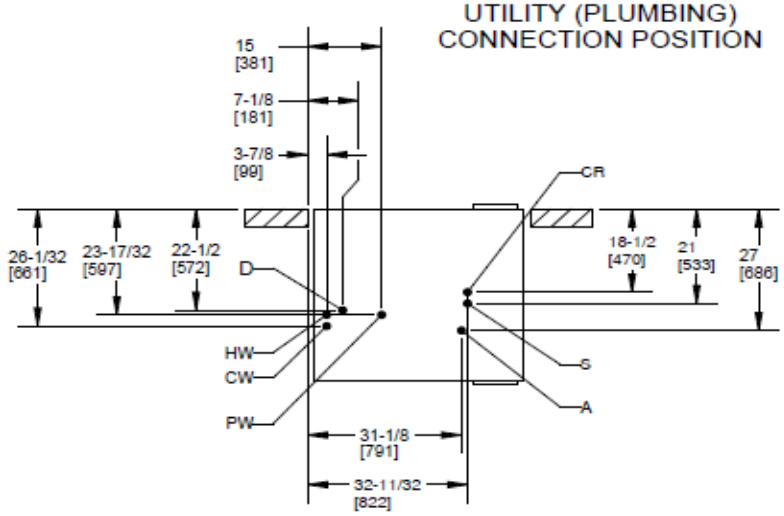

HW	HOT WATER
CW	COLD WATER
PW	PURE WATER
A	COMPRESSED AIR
D	FLOOR DRAIN LOCATION
S	STEAM
CR	CONDENSATE RETURN

TOP VIEW

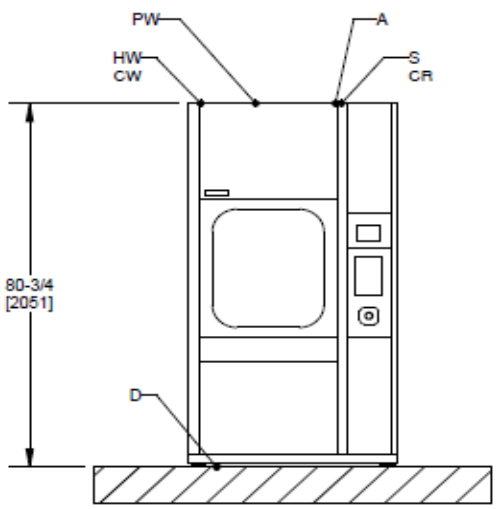

FRONT VIEW

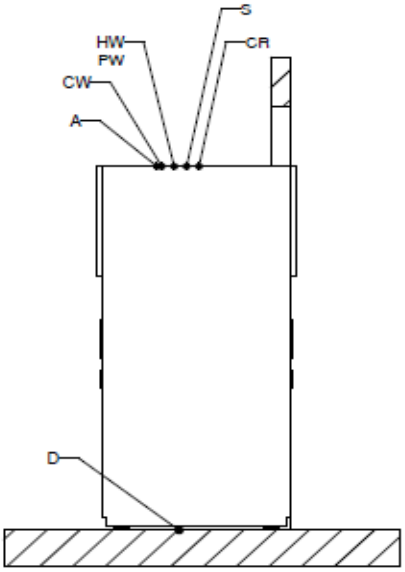

SIDE VIEW

STERIS Corporation

TITLE: EQUIPMENT DRAWING OF
AMSCO® 7053HP SINGLE-CHAMBER WASHER/DISINFECTOR
STEAM HEATED, W/O ACU-RINSE RES., UNIT FLUSH TO WALL

SIZE:	SCALE:	DRAWN BY:	DRAWING NUMBER:	PART NUMBER & REVISION
A	N/A	Jean Tanguay	10288795	10288795.D

Page 3 of 10

This document contains confidential and proprietary information of STERIS Corporation. Neither this document nor the information herein are to be reproduced, either in part or in whole, except as specifically authorized by STERIS Corporation.

901 Montgomery Street
Decorah, IA 52101

PHONE 563-382-2911
FAX 563-387-3102

WinnMed

Released

UTILITY (ELECTRICITY)
CONNECTION POSITION

E	ELECTRICAL
N	NETWORK

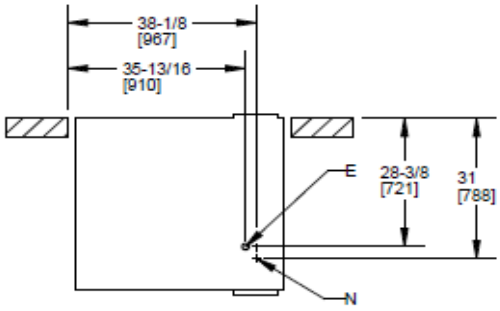

TOP VIEW

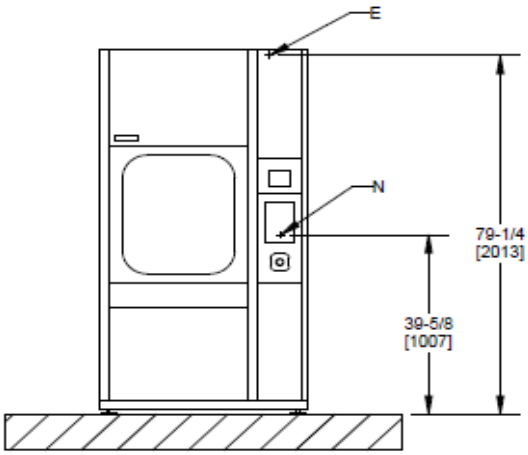

FRONT VIEW

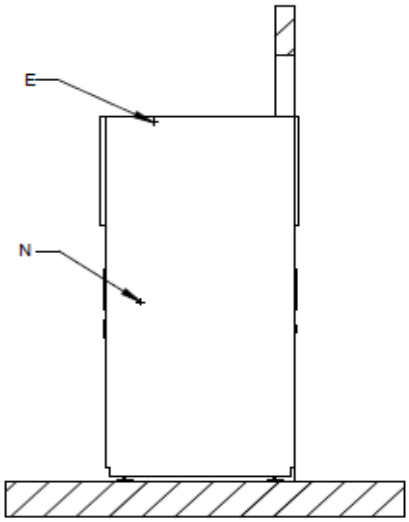

SIDE VIEW

STERIS Corporation

TITLE: EQUIPMENT DRAWING OF
AMSCO® 7053HP SINGLE-CHAMBER WASHER/DISINFECTOR
STEAM HEATED, W/O ACU-RINSE RES., UNIT FLUSH TO WALL

SIZE:	SCALE:	DRAWN BY:	DRAWING NUMBER:	PART NUMBER & REVISION
A	N/A	Jean Tanguay	10288795	10288795.D

Page 4 of 10

This document contains confidential and proprietary information of STERIS Corporation. Neither this document nor the information herein are to be reproduced, either in part or in whole, except as specifically authorized by STERIS Corporation.

901 Montgomery Street
Decorah, IA 52101

PHONE 563-382-2911
FAX 563-387-3102

WinnMed

Released

UTILITY (VENTILATION)
CONNECTION POSITION (OPTIONAL)

EX	VENTILATION EXHAUST

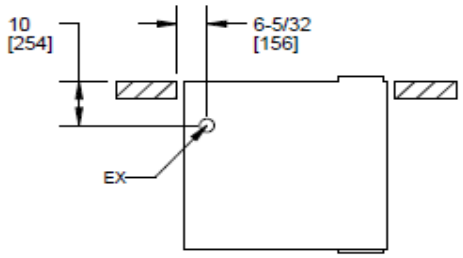

TOP VIEW

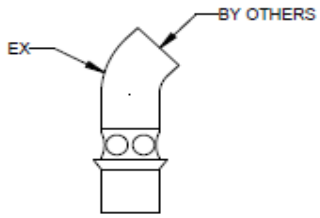

VENTILATION CONNECTION (OPTIONAL)
(SEE PAGE 9 *(NOTE 1)
DRY CONTACT (SEE PAGE 10 *(NOTE 3))

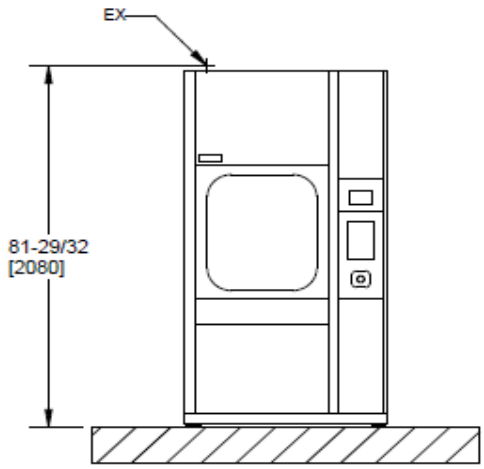

FRONT VIEW

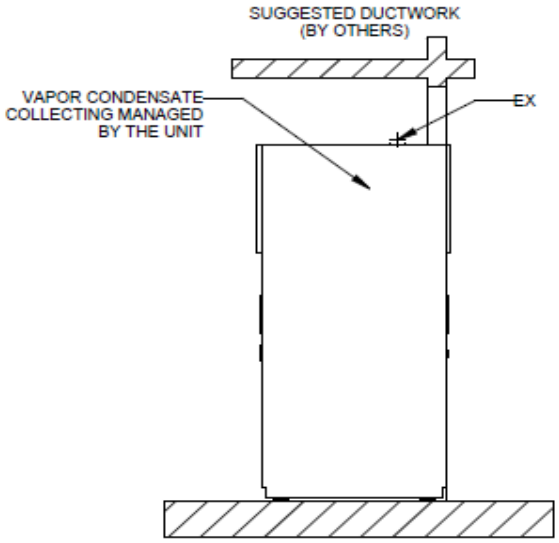

SIDE VIEW

STERIS Corporation

TITLE	EQUIPMENT DRAWING OF AMSCO® 7053HP SINGLE-CHAMBER WASHER/DISINFECTOR STEAM HEATED, W/O ACU-RINSE RES., UNIT FLUSH TO WALL				
	SIZE: A	SCALE: N/A	DRAWN BY: Jean Tanguay	DRAWING NUMBER: 10288795	PART NUMBER & REVISION
Page 5 of 10					10288795.D

This document contains confidential and proprietary information of STERIS Corporation. Neither this document nor the information herein are to be reproduced, either in part or in whole, except as specifically authorized by STERIS Corporation.

901 Montgomery Street
Decorah, IA 52101

PHONE 563-382-2911
FAX 563-387-3102

WinnMed

Released

DOSING STATION

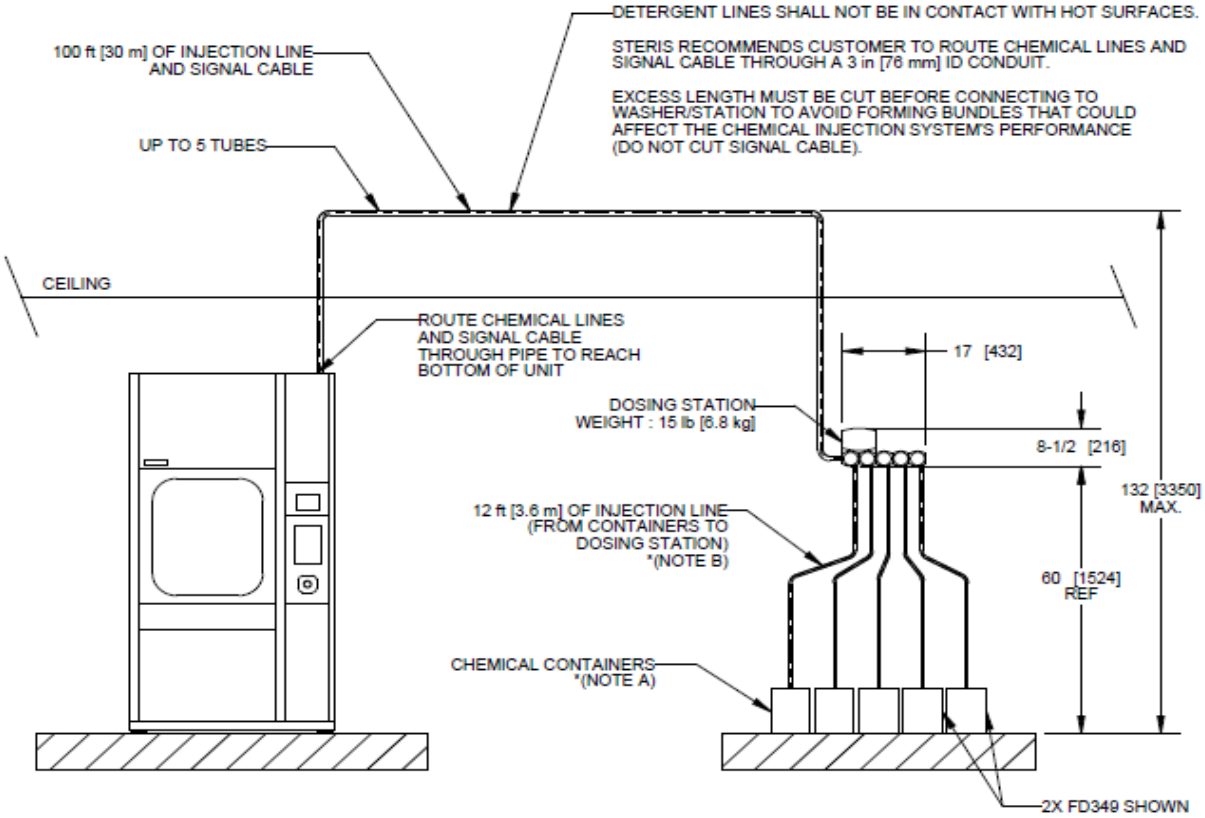

*NOTES:

(A) DOSING STATION AND CHEMICAL CONTAINERS MUST BE ON THE SAME FLOOR OF THE BUILDING AS THE WASHER/DISINFECTOR. CHEMICAL CONTAINER MUST BE LOCATED AT A LOWER HEIGHT THAN DOSING STATION. MAXIMUM CONTAINER INCLINATION IS 15 DEG FROM FLOOR. AMBIENT TEMPERATURE SHALL NOT EXCEED 32 °C [90 °F]

(B) HP PICKOP TUBE SYSTEM CAN PROVIDE UP TO TWO WASHERS WITH CHEMISTRY FROM THE SAME CONTAINER.

		INSTRUMENT (With PUC HP)	UTENSIL (With PUC HP)
CHEMICAL (CH)	ENZYME CONSUMPTION PER CYCLE (SEE PAGE 7; *(NOTE 4))	0.74 oz [22 ml]	0.74 oz [22 ml]
	DETERGENT CONSUMPTION PER CYCLE (SEE PAGE 7; *(NOTE 4))	0.74 oz [22 ml]	0.74 oz [22 ml]
	LUBRICANT CONSUMPTION PER CYCLE (SEE PAGE 7; *(NOTE 4))	0.2 oz [6 ml]	N/A

STERIS Corporation

TITLE: EQUIPMENT DRAWING OF AMSCO® 7053HP SINGLE-CHAMBER WASHER/DISINFECTOR STEAM HEATED, W/O ACU-RINSE RES., UNIT FLUSH TO WALL

SIZE:	SCALE:	DRAWN BY:	DRAWING NUMBER:	PART NUMBER & REVISION
A	N/A	Jean Tanguay	10288795	10288795.D

Page 6 of 10

This document contains confidential and proprietary information of STERIS Corporation. Neither this document nor the information herein are to be reproduced, either in part or in whole, except as specifically authorized by STERIS Corporation.

901 Montgomery Street
Decorah, IA 52101

PHONE 563-382-2911
FAX 563-387-3102

WinnMed

Released

UTILITY REQUIREMENTS CHART (PLUMBING)

UTILITY	PARAMETER	REQUIREMENT	✓
HOT WATER (HW)	CONNECTION SIZE / TYPE	1/2 in / FEMALE NPT [1/2 in / MALE BSPT]	
	PRESSURE RANGE	15 - 50 psig DYNAMIC [103-345 kPa] MAX. 90 psig STATIC [620 kPA]	
	OPERATING FLOW RATE	6.8 US GPM [25.7 L/min] TO 14.1 US GPM [53.4 L/min]	
	TOTAL CONSUMPTION PER INSTRUMENT CYCLE *(NOTE 4)	9.9 US GAL [37.5 L] WITH ACU-WASH RESERVOIR: 6.6 US GAL [25.0 L]	
	TEMPERATURE RANGE	110 °F [43 °C] TO 150 °F [65.5 °C]	
	WATER QUALITY *(NOTE 5)	HARDNESS (CaCO3) : 50-80 ppm (MAX. 120 ppm)	
COLD WATER (CW) *(NOTES 6)	CONNECTION SIZE / TYPE	1/2 in / FEMALE NPT [1/2 in / MALE BSPT]	
	PRESSURE RANGE	30 - 50 psig DYNAMIC [206-345 kPa] MAX. 90 psig STATIC [620 kPa]	
	OPERATING FLOW RATE	10.7 US GPM [40.5 L/min] TO 14.1 US GPM [53.4 L/min]	
	TOTAL CONSUMPTION PER INSTRUMENT CYCLE *(NOTE 4)	FOR SUMP FILLING: 18.9 US GAL [71.5 L] (ADD THE FOLLOWING CONSUMPTION FOR OPTIONS/CONFIGURATIONS) CONDENSATE RETURN COOL DOWN: 8.1 US GAL [30.7 L] NON-VENTED SYSTEM: 13.3 US GAL [50.3 L] DRAIN COOLDOWN: 15.8 US GAL [59.8 L] DRAIN ACU-COOLDOWN: 12.1 US GAL [45.8 L]	
	TEMPERATURE RANGE	70 °F [21 °C] MAXIMUM	
	WATER QUALITY *(NOTE 5)	HARDNESS (CaCO3) : 50-80 ppm (MAX. 120 ppm)	
PURE WATER (PW)	CONNECTION SIZE / TYPE	1/2 in / FEMALE NPT [1/2 in / MALE BSPT]	
	PRESSURE RANGE	5 - 30 psig DYNAMIC [30 - 206 kPa] MAX. 90 psig STATIC [620 kPa]	
	OPERATING FLOW RATE	5.5 US GPM [21 L/min] TO 12.6 US GPM [48 L/min]	
	TOTAL CONSUMPTION PER INSTRUMENT CYCLE * (NOTE 4 AND NOTE 7)	6.6 US GAL [25.0 L]	
	TEMPERATURE RANGE	70 °F [21.1 °C] TO 150 °F [65.5 °C]	
	RESISTIVITY (CONDUCTIVITY)	0.1-0.5 MΩ -cm (2-10 µS/cm)	
	pH	6.8 - 7.5	

NOTES

1. STERIS REQUIRES TO INSTALL WATER HAMMER ARRESTOR, UNION & PRESSURE GAUGE.
2. CUSTOMER MUST PROVIDE UTILITY CONNECTIONS WITH SHUTOFFS DISCONNECTS WITHIN 2 FEET OF THE PERIMETER OF THE EQUIPMENT AND BELOW THE CEILING DECK.
   *STERIS OFFERS FLEXIBLE HOSES ACCESSORY (FD088 OR FD037) WITH INSTRUCTIONS.
3. SAMPLING VALVES INSTALLATION AS CLOSE AS POSSIBLE TO WASHER WATER CONNECTION IS RECOMMENDED.
4. CONSUMPTION BASED ON INSTRUMENT CYCLE WITH PROLYSTICA ULTRA CONCENTRATE HIGH PERFORMANCE CHEMICALS (PUC HP) WITH THE FOLLOWING UTILITY CONDITIONS:

   THREE-LEVEL MANIFOLD RACK
   (CW) COLD WATER PRESSURE: 30 psig DYNAMIC [207 kPa]
   (CW) COLD WATER TEMPERATURE: 70 °F [21 °C]
   (HW) HOT WATER TEMPERATURE: 150 °F [65 °C]
   (PW) PURE WATER TEMPERATURE 70 °F [21 °C]
   (S) STEAM SUPPLY: 80 psig DYNAMIC [552 kPa]

   UTENSIL CYCLE CONSUMPTION:
   TWO-LEVEL MANIFOLD RACK
   CW: 10.4 US GAL [39.4 L]
   HW: 9.6 US GAL [36.3 L]
   PW: 6.4 US GAL [24.2 L]
   S: 19.3 lb [8.8 kg]
5. STERIS RECOMMENDS THE FOLLOWING WATER QUALITY PARAMETERS:
   TOTAL DISSOLVED SOLIDS: 100-200 ppm (MAX. 500 ppm)
   TOTAL ALKALINITY (CaCO3) : 70-120 ppm (MAX. 180 ppm)
   pH : 6.8-7 (MAX. 7.5)
   TOTAL SILICA : 0.1-0.5 ppm (MAX. 1 ppm)
6. BACK FLOW PREVENTER AGAINST BACK SIPHONAGE MAY BE REQUIRED (LOCAL PLUMBING CODE)
7. PW IS OPTIONAL. IF UNAVAILABLE, UNIT WILL PROCESS THERMAL RINSE USING HOT WATER SUPPLY.

STERIS Corporation

TITLE: EQUIPMENT DRAWING OF AMSCO® 7053HP SINGLE-CHAMBER WASHER/DISINFECTOR STEAM HEATED, W/O ACU-RINSE RES., UNIT FLUSH TO WALL

SIZE:	SCALE:	DRAWN BY:	DRAWING NUMBER:	PART NUMBER & REVISION
A	N/A	Jean Tanguay	10288795	10288795.D

Page 7 of 10

This document contains confidential and proprietary information of STERIS Corporation. Neither this document nor the information herein are to be reproduced, either in part or in whole, except as specifically authorized by STERIS Corporation.

901 Montgomery Street
Decorah, IA 52101

PHONE 563-382-2911
FAX 563-387-3102

WinnMed

Released

UTILITY REQUIREMENTS CHART (PLUMBING)

UTILITY	PARAMETER	REQUIREMENT	✓	NOTES
COMPRESSED AIR (A)	CONNECTION SIZE / TYPE	1/8 in / FEMALE NPT [1/8 in / MALE BSPT]		1. AIR PURITY PER ISO-8573-1: 2010 [7:4:4] MAX. PARTICLE DENSITY: 10 mg/m³ MAX. DEW POINT FOR WATER CONTENT: 37 °F [3 °C] MAX. OIL CONCENTRATION FOR THE OIL CONTENT: 5 mg/m³ 2. STERIS RECOMMENDS A REFRIGERATED AIR DRYER WHERE ENVIRONMENTAL DEW POINT CONDITIONS ARE HIGHER THAN RECOMMENDED. 3. CUSTOMER MUST PROVIDE UTILITY CONNECTIONS WITH SHUTOFFS DISCONNECTS WITHIN 2 FEET OF THE PERIMETER OF THE EQUIPMENT AND BELOW THE CEILING DECK.
	PRESSURE RANGE	MIN 80 psig DYNAMIC [552 kPa] MAX. 125 psig STATIC [860 kPa]		
	OPERATING FLOW RATE	1.75 SCFM [50 L/min]		
DRAIN (D)	FLOOR DRAIN SIZE	MIN 4 in [102 mm] O.D. WITH 8 in x 8 in [204 mm x 204 mm] FLOOR SINK		4. WASHER DRAIN OUTLET SIZE 1-1/2 in / MALE NPT 5. MAX OFFSET OF ± 3/4 in [19 mm] FROM OUTLET (PAGE 3, D). 6. FOR DRAIN REQUIREMENTS WHEN USING SEISMIC MOUNTS, SEE PAGE 2.
	OPERATING FLOW RATE	GRAVITY DRAIN : 50 US GPM [189.3 L/min]		
STEAM INLET (S)	CONNECTION SIZE / TYPE	1/2 in / FEMALE NPT [1/2 in / MALE BSPT]		7. STERIS REQUIRES AT LEAST 97% SATURATED DRY PLANT STEAM, FREE OF DIRT, RESIDUES AND CONTAMINANTS. 8. STERIS RECOMMENDS TO INSTALL A STEAM TRAP AS CLOSE AS POSSIBLE TO UNIT CONNECTION. 9. PROPER OPERATION OF THE WASHER REQUIRES A MINIMUM PRESSURE DIFFERENTIAL OF 21.5 psig [148 kPa] BETWEEN STEAM INLET AND CONDENSATE RETURN. IN CASES OF LOW STEAM INLET PRESSURE, CONDENSATE CAN BE ROUTED TO DRAIN TO INCREASE DIFFERENTIAL. *STERIS OFFERS CONDENSATE RETURN TO DRAIN ACCESSORY (FD353) 10. CUSTOMER MUST PROVIDE UTILITY CONNECTIONS WITH SHUTOFFS DISCONNECTS WITHIN 2 FEET OF THE PERIMETER OF THE EQUIPMENT AND BELOW THE CEILING DECK.
	PRESSURE RANGE	30 - 80 psig DYNAMIC [206-552 kPa] MAX. 90 psig STATIC [620 kPa]		
	OPERATING MASS FLOW RATE	169 lb/h [76.5 kg/h] AT 30 psig [207 kPa] 271 lb/h [123 kg/h AT 80 psig [550 kPa]		
	TOTAL CONSUMPTION PER INSTRUMENT CYCLE (SEE PAGE 7, *(NOTE 4))	19.3 lb [8.8 kg]		
CONDENSATE RETURN (CR)	PRESSURE RANGE	MAX. 8.5 psig [68.9 kPa] BACK PRESSURE (17 ft [5.2 m] ELEVATION)		
	OPERATING FLOW RATE	PEAK : 0.54 US GPM [2.05 L/min]		
	CONNECTION SIZE / TYPE	1/2 in / FEMALE NPT [1/2 in / MALE BSPT]		
CHEMICAL DOSING SYSTEM	CEILING ROUTING CONDUIT	3 in CONDUIT		11. STERIS RECOMMENDS TO ROUTE CHEMICAL LINES AND SIGNAL CABLE THROUGH A 3 in [76 mm] ID CONDUIT (BY OTHERS). 100 ft [30 m] OF INJECTION LINE AND SIGNAL CABLE ARE PROVIDED WITH THE UNIT.

STERIS Corporation

TITLE: EQUIPMENT DRAWING OF AMSCO® 7053HP SINGLE-CHAMBER WASHER/DISINFECTOR STEAM HEATED, W/O ACU-RINSE RES., UNIT FLUSH TO WALL

SIZE:	SCALE:	DRAWN BY:	DRAWING NUMBER:	PART NUMBER & REVISION
A	N/A	Jean Tanguay	10288795	10288795.D

Page 8 of 10

This document contains confidential and proprietary information of STERIS Corporation. Neither this document nor the information herein are to be reproduced, either in part or in whole, except as specifically authorized by STERIS Corporation.

901 Montgomery Street
Decorah, IA 52101

PHONE 563-382-2911
FAX 563-387-3102

WinnMed

Released

UTILITY REQUIREMENTS CHART (ELECTRIC)

UTILITY		PARAMETER AND REQUIREMENT: CONNECTION SIZE/TYPE	NOMINAL AMPERAGE	RECOMMENDED CIRCUIT	✓	NOTES
ELECTRICITY (EL)	200-208V 60 Hz, 3-Ph	1 in [27 mm] 1-1/4 in [35 mm] CONDUIT	36 A	50 A		1. ALL CONNECTIONS SHOULD BE IN ACCORDANCE WITH LOCAL CODES. 2. NEUTRAL WIRE NOT REQUIRED. 3. ALWAYS FOLLOW LOCAL ELECTRICAL CODES AND SAFETY-RELATED WORK PRATICES TO DETERMINE THE VALUE OF PROTECTION. 4. WIRING ON THE EQUIPMENT TERMINATES AT A JUNCTION BOX. WIRING BETWEEN JUNCTION BOX AND BUILDING SERVICE LINES ARE NOT SUPPLIED BY STERIS. 5. DISCONNECT SWITCHES WITH OFF POSITION LOCKOUT (SUPPLIED BY OTHERS) MUST BE INSTALLED IN ELECTRIC SUPPLY LINES NEAR THE EQUIPMENT. 6. STERIS RECOMMENDS A LIGHT IN SERVICE AREA.
	200-208V 60 Hz, 3-Ph WITH 40A MIN. CIRCUIT PROTECTION	1 in [27 mm] 1-1/4 in [35 mm] CONDUIT	28.5 A	40 A		
	200-208V 50 Hz, 3-Ph	1 in [27 mm] 1-1/4 in [35 mm] CONDUIT	35 A	50 A		
	460-480V 60 Hz, 3-Ph	1 in [27 mm] 1-1/4 in [35 mm] CONDUIT	16.5 A	30 A		
	380-400V 60 Hz, 3-Ph	1 in [27 mm] 1-1/4 in [35 mm] CONDUIT	19 A	30 A		
	380-400-415V 50 Hz, 3-Ph	1 in [27 mm] 1-1/4 in [35 mm] CONDUIT	18.5 A	30 A		
NETWORK (N) OPTIONAL		100/1000 BASE T SUPPORTING TCP/IP PROTOCOL RJ45F CONNECTION				7. NETWORK CONNECTION (IF APPLICABLE) - ACTIVE NETWORK DROP WITH CAT 5/6 CABLE WITHIN 10 ft [3 m] OF UNIT - STATIC OR DHCP RESERVED IP ADDRESS (FOR EACH UNIT) - NETWORK CABLE (SUPPLIED BY OTHER)

STERIS Corporation

TITLE: EQUIPMENT DRAWING OF AMSCO® 7053HP SINGLE-CHAMBER WASHER/DISINFECTOR STEAM HEATED, W/O ACU-RINSE RES., UNIT FLUSH TO WALL

SIZE:	SCALE:	DRAWN BY:	DRAWING NUMBER:	PART NUMBER & REVISION
A	N/A	Jean Tanguay	10288795	10288795.D

Page 9 of 10

This document contains confidential and proprietary information of STERIS Corporation. Neither this document nor the information herein are to be reproduced, either in part or in whole, except as specifically authorized by STERIS Corporation.

901 Montgomery Street
Decorah, IA 52101

PHONE 563-382-2911
FAX 563-387-3102

WinnMed

Released

UTILITY REQUIREMENTS CHART

UTILITY	PARAMETER	REQUIREMENT	✓	NOTES
VENTILATION EXHAUST (EX) OPTIONAL	CONNECTION SIZE	3 in [76 mm] OUTSIDE DIAMETER		1. NOT REQUIRED WITH NON VENTED UNIT. 2. STERIS REQUIRES CORROSION-RESISTANT AND WATER-TIGHT DUCT: - MIN OPERATING TEMPERATURE 210 °F [99 °C] - SLOPED TOWARDS THE WASHER AND NO DEAD LEGS - INSTALL DRAIN PART AT LOWEST POINT NEAR UNIT 3. EXHAUST FAN NORMALLY OPEN-AUXILIARY CONTACTS IS AVAILABLE TO SUPPLY A SIGNAL TO THE FACILITY HVAC CONTROL SYSTEM WHENEVER THE WASHER VENTILATION EXHAUST FAN IS IN OPERATION.
	PRESSURE RANGE	1/2 in [50 mm] VACUUM AT CONNECTION		
	OPERATING FLOW RATE	60 SCFM [1.7 m³/min]		
	TEMPERATURE RANGE	MAX. 240 °F [116 °C]		

PHYSICAL SPECIFICATIONS

SHIPPING DIMENSION W x H x L	50 in x 91 in x 48 in [1270 mm x 2311 mm x 1219 mm]	1. LEVELING FEET ARE PROVIDED FOR PROPER INSTALLATION. 2. PERMISSIBLE ENVIRONMENTAL CONDITIONS. THIS EQUIPMENT IS DESIGNED TO GIVE OPTIMAL RESULTS UNDER THE FOLLOWING CONDITIONS: - INDOOR USE ONLY; - ALTITUDE OF OPERATION UP TO 6562 ft [2000 m]; - TEMPERATURE OF 41 TO 104 °F [5 to 40 °C]; - MAXIMUM RELATIVE HUMIDITY IS 80% FOR TEMPERATURE UP TO 88 °F [31 °C], DECREASING LINEARLY TO 50% RELATIVE HUMIDITY AT 104 °F [40 °C]; - POLLUTION DEGREE 2: EQUIPMENT MUST BE INSTALLED IN AN ENVIRONMENT WHERE NORMALLY ONLY NON-CONDUCTIVE POLLUTION OCCURS BUT WHERE OCCASIONAL, TEMPORARY CONDUCTIVITY CAUSED BY CONDENSATION CAN BE EXPECTED (AS DETERMINED ACCORDING TO INTERNATIONAL STANDARD EN/IEC 61010-1). 3. STERIS ASSUMES NO RESPONSIBILITY FOR CHANGES MADE TO, OR FAILURE TO OBSERVE THE SPECIFICATIONS ON EQUIPMENT DRAWING AND NOTE PAGES. SPECIFICATIONS AND DESCRIPTIONS ARE SUBJECT TO CHANGE WITHOUT NOTICE.
SHIPPING WEIGHT	1350 lb [612 kg]	
OPERATING DIMENSION W x H x L	42 in x 80.75 in x 38 in [1067 mm x 2051 mm x 965 mm]	
OPERATING WEIGHT (WITH WATER AND FULLY LOADED)	1336 lb [606 kg]	
AVERAGE FLOOR LOAD OVER WASHER FOOTPRINT	0.84 psi [5.77 kPa]	
MAX. FLOOR LOAD AT WASHER FOOT PADS (3 in [76.2 mm] DIAMETER PADS)	71 psi [491 kPa]	
NOISE LEVEL: A-WEIGHTED EQUIVALENT SURFACE SOUND PRESSURE LEVEL	60.6 dB(A) CALCULATED AS DESCRIBED IN ISO 3746.	
OPENING AREA FROM CLEAN SIDE TO SOILED SIDE	46.5 in² [300 cm²] *(NOTE 4)	4. OPENING AREA CAN BE REDUCED TO 13 in² [84 cm²] WITH INSTALLATION OF AIR MANAGEMENT PANELS ACCESSORY (FD352)
CHAMBER DIMENSION W x H x L VOLUME	26.5 in x 26.25 in x 31.5 in [673 mm x 667 mm x 800 mm] 12.7 ft³ [0.36 m³]	

TYPICAL HEAT LOSS AT 75 °F [24 °C] CONTINUOUS OPERATION

	NON-VENTED UNIT WITHOUT ACU-RINSE RES.	VENTED UNIT (OPTIONAL) WITHOUT ACU-RINSE RES.
CLEAN SIDE	2186 Btu/h [640 W]	2186 Btu/h [640 W]
SOILED SIDE	7069 Btu/h [2070 W]	5259 Btu/h [1540 W]
TOTAL	9255 ± 854 Btu/h [2710 ± 250 W]	7445 ± 854 Btu/h [2180 ± 250 W]

VALUES INCLUDE HEAT LOSS DURING DOOR OPENING FOR LOADING AND UNLOADING OPERATIONS. "TOTAL" WILL VARY DEPENDING ON DISINFECTION TIME AND TEMPERATURE, DRYING TIME AND TEMPERATURE AND USE RATE OF UNIT.
AN ADDITIONAL HEAT LOSS FOR LOAD COOL DOWN IN CLEAN SIDE CAN BE ADDED TO THE TOTAL HEAT LOSS OF THE WASHER: MAXIMUM 1713 Btu [1807 kJ]

STERIS Corporation

TITLE: EQUIPMENT DRAWING OF AMSCO® 7053HP SINGLE-CHAMBER WASHER/DISINFECTOR STEAM HEATED, W/O ACU-RINSE RES., UNIT FLUSH TO WALL

SIZE:	SCALE:	DRAWN BY:	DRAWING NUMBER:	PART NUMBER & REVISION
A	N/A	Jean Tanguay	10288795	10288795.D

This document contains confidential and proprietary information of STERIS Corporation. Neither this document nor the information herein are to be reproduced, either in part or in whole, except as specifically authorized by STERIS Corporation.

901 Montgomery Street
Decorah, IA 52101

PHONE 563-382-2911
FAX 563-387-3102

WinnMed

WinnMed **Issue Date:** **3/6/2024**
Expansion and Renovation
Decorah, IA 52101
Furniture Specifications

CONTACT: Ben Stevens - CFO
PHONE NUMBER: 563-387-3109

ITEM NUMBER:	5

ITEM NAME:	Auto Docking Transfer Cart		
ROOM NUMBER:		**QUANTITY:**	

SPECIFICATION INFORMATION

MANUFACTURER: Steris
MODEL #: FD179
DIMENSIONS:
DESCRIPTION: Auto docking transfer cart for Long Chamber Washer/Disinfector; includes bottle collection kit

FURNITURE & EQUIPMENT IMAGE

901 Montgomery Street
Decorah, IA 52101

PHONE 563-382-2911
FAX 563-387-3102

WinnMed

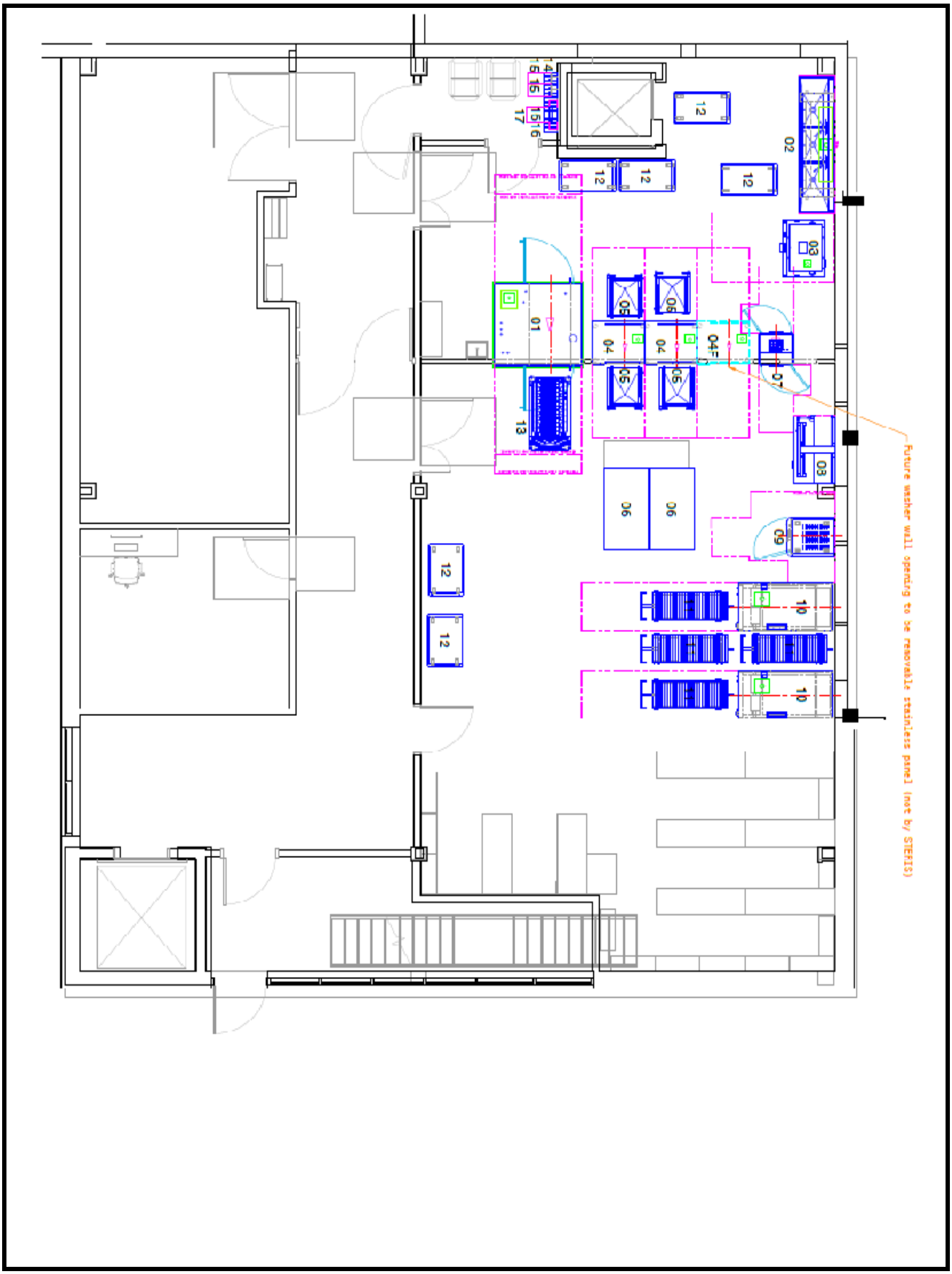

901 Montgomery Street
Decorah, IA 52101

PHONE 563-382-2911
FAX 563-387-3102

WinnMed

WinnMed **Issue Date:** **3/6/2024**
Expansion and Renovation
Decorah, IA 52101
Furniture Specifications

CONTACT: Ben Stevens - CFO
PHONE NUMBER: 563-387-3109

ITEM NUMBER:	6

ITEM NAME:	Work Table		
ROOM NUMBER:		**QUANTITY:**	

SPECIFICATION INFORMATION

MANUFACTURER: Steris
MODEL #: CG5
DIMENSIONS: 36" W x 72" L x 26.5" - 41.5" H
DESCRIPTION: Adjustable Height work table (no shelf or accessories); electric height adj; 120V; 15 A

FURNITURE & EQUIPMENT IMAGE

901 Montgomery Street
Decorah, IA 52101

PHONE 563-382-2911
FAX 563-387-3102

WinnMed

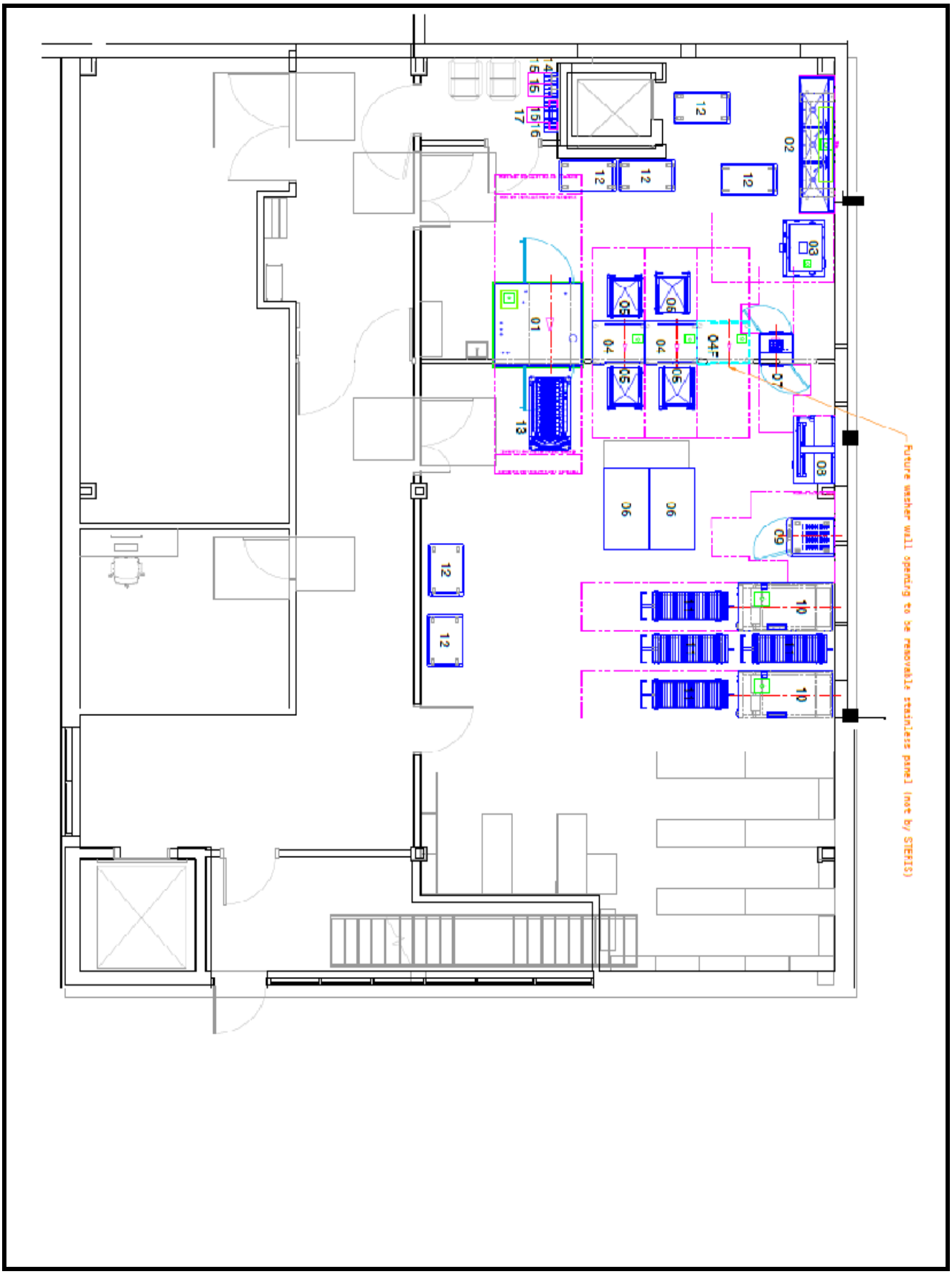

901 Montgomery Street
Decorah, IA 52101

PHONE 563-382-2911
FAX 563-387-3102

WinnMed

WinnMed **Issue Date:** **3/6/2024**
Expansion and Renovation
Decorah, IA 52101
Furniture Specifications

CONTACT: Ben Stevens - CFO
PHONE NUMBER: 563-387-3109

ITEM NUMBER:	7

ITEM NAME:	Drying Pass Through Cabinet		
ROOM NUMBER:		**QUANTITY:**	

SPECIFICATION INFORMATION

MANUFACTURER: Steris
MODEL #: DCR101101XL
DIMENSIONS: 29" W x 27.5" D x 78.5" H
DESCRIPTION: Drying cabinet; Qty 9 XL Full width shelves; pass through; two doors with inter-lockout design; touch screen controls; air purge system; trim kit included

FURNITURE & EQUIPMENT IMAGE

901 Montgomery Street
Decorah, IA 52101

PHONE 563-382-2911
FAX 563-387-3102

WinnMed

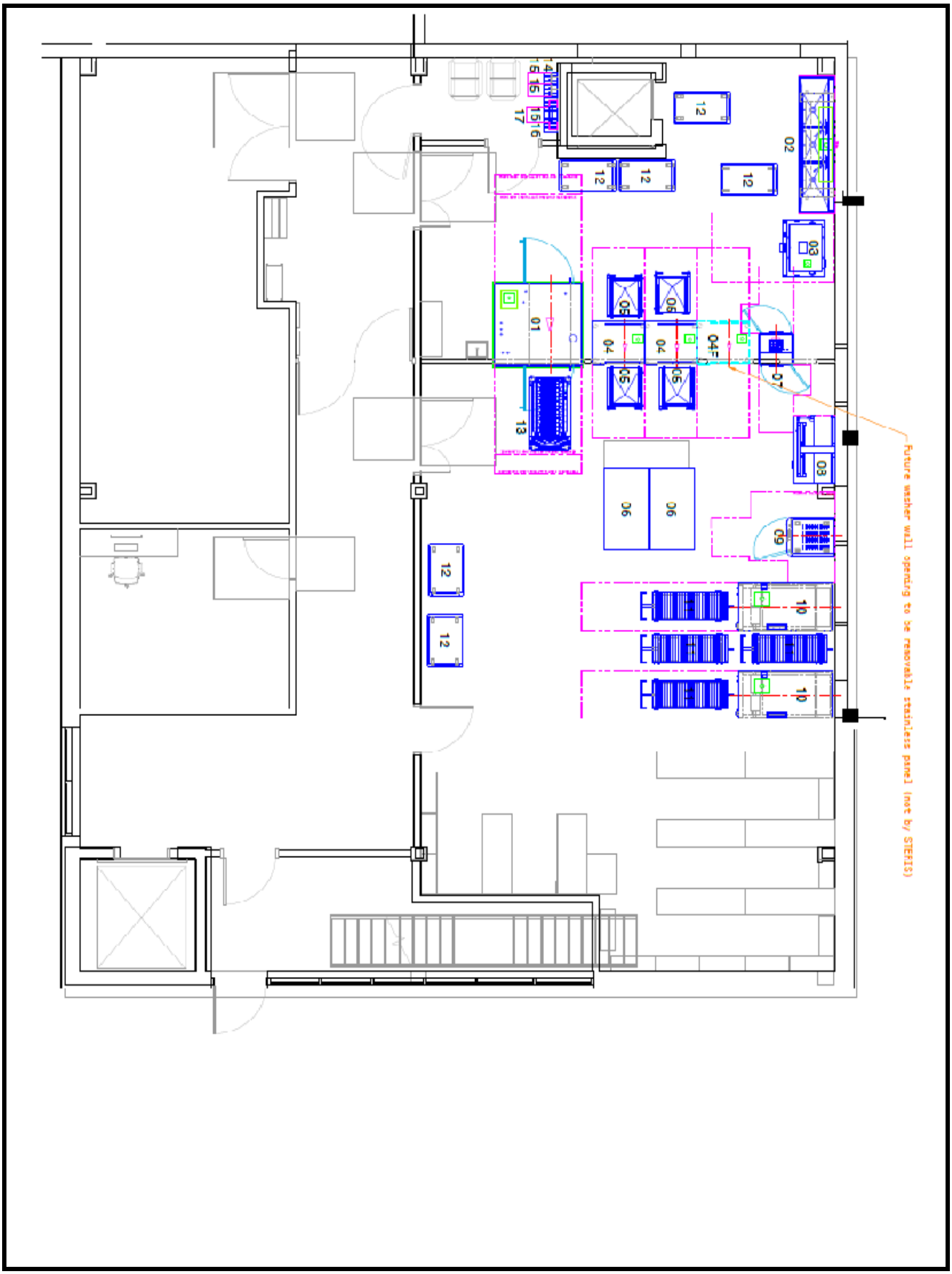

901 Montgomery Street
Decorah, IA 52101

PHONE 563-382-2911
FAX 563-387-3102

WinnMed

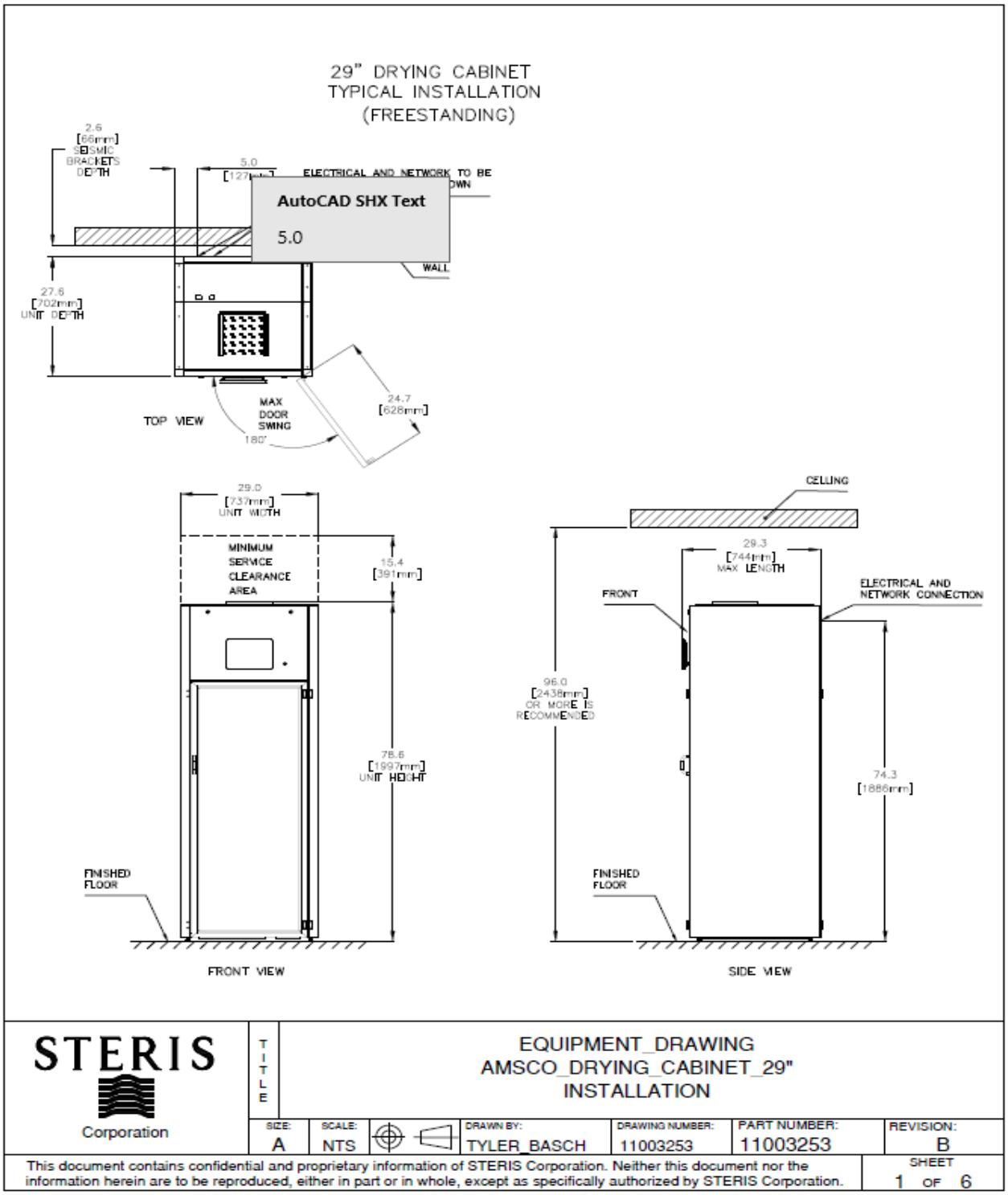

901 Montgomery Street
Decorah, IA 52101

PHONE 563-382-2911
FAX 563-387-3102

WinnMed

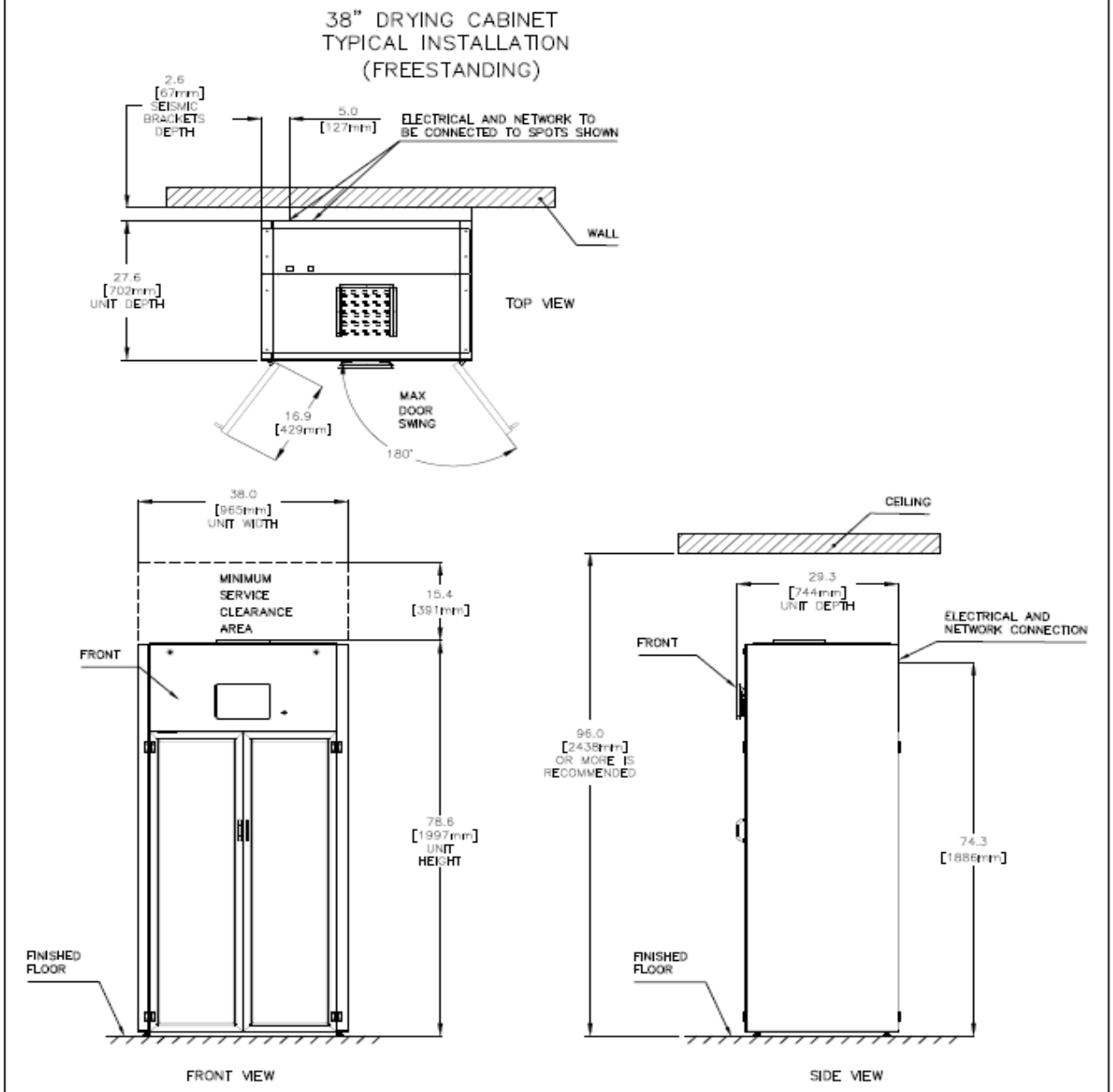

STERIS Corporation

TITLE	SIZE:	SCALE:	DRAWN BY:	DRAWING NUMBER:	PART NUMBER:	REVISION:
EQUIPMENT_DRAWING AMSCO_DRYING_CABINET_38" INSTALLATION	A	NTS	TYLER_BASCH	11003253	11003253	B

This document contains confidential and proprietary information of STERIS Corporation. Neither this document nor the information herein are to be reproduced, either in part or in whole, except as specifically authorized by STERIS Corporation.

SHEET 2 OF 6

901 Montgomery Street
Decorah, IA 52101

PHONE 563-382-2911
FAX 563-387-3102

WinnMed

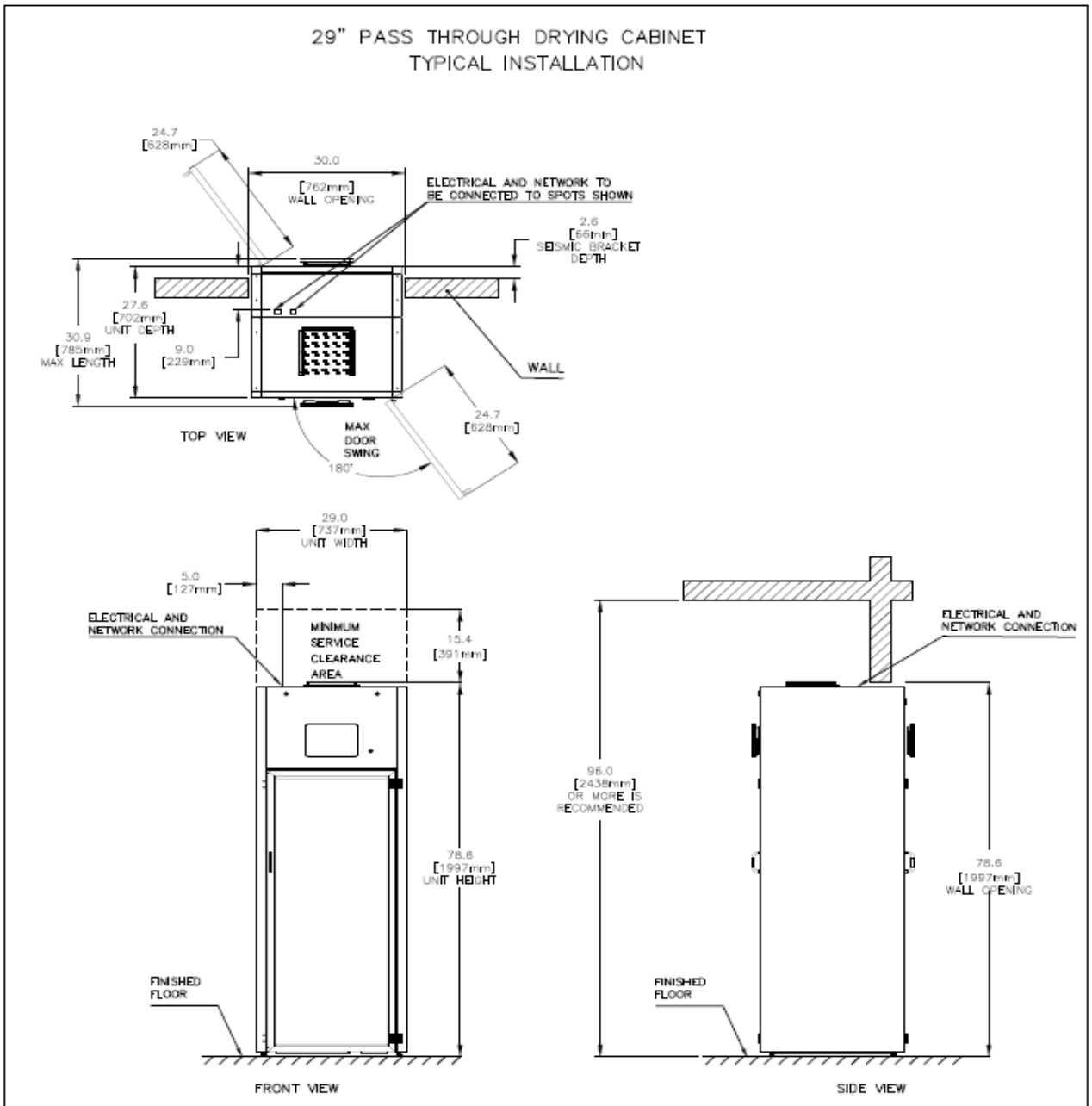

901 Montgomery Street
Decorah, IA 52101

PHONE 563-382-2911
FAX 563-387-3102

WinnMed

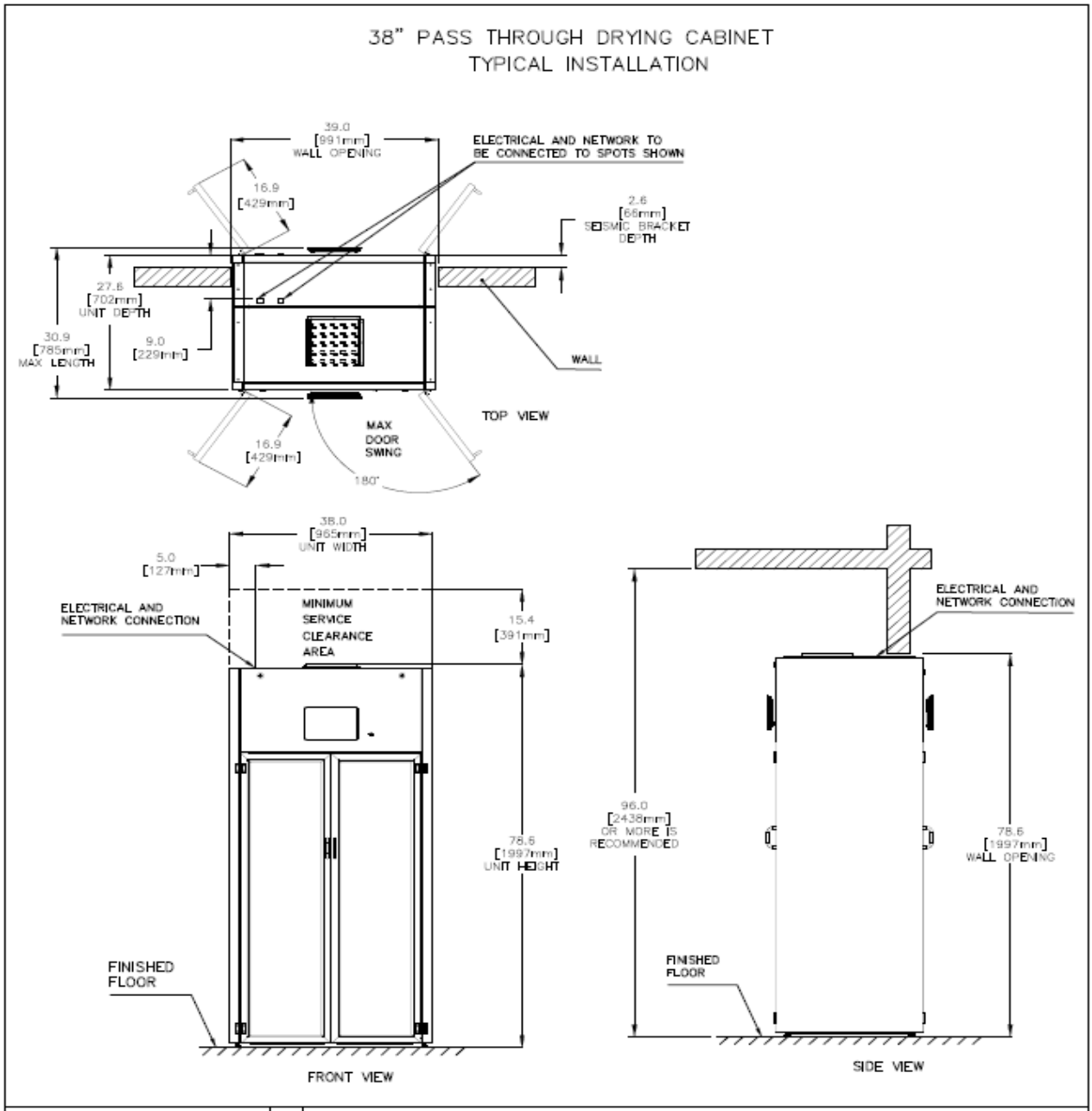

901 Montgomery Street
Decorah, IA 52101

PHONE 563-382-2911
FAX 563-387-3102

WinnMed

METHOD #1

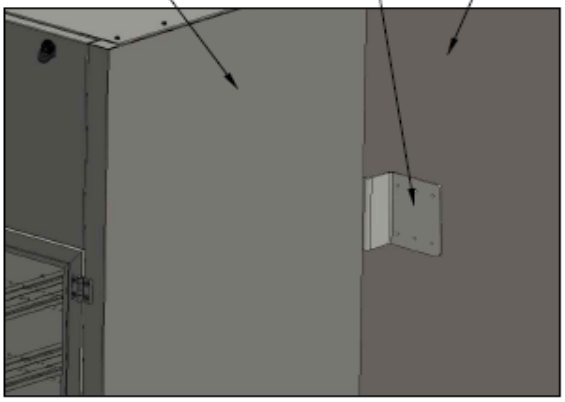

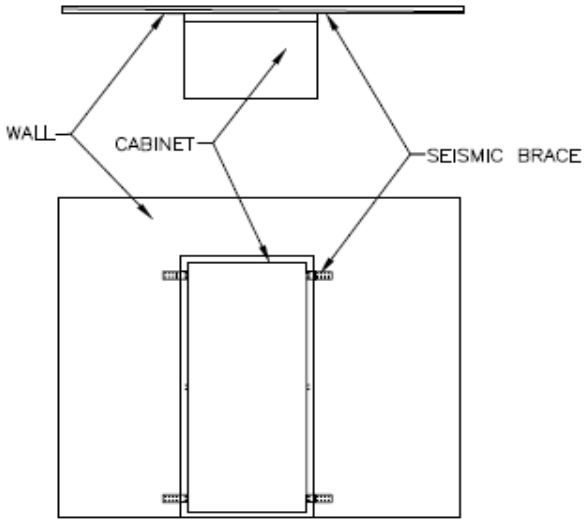

METHOD #2

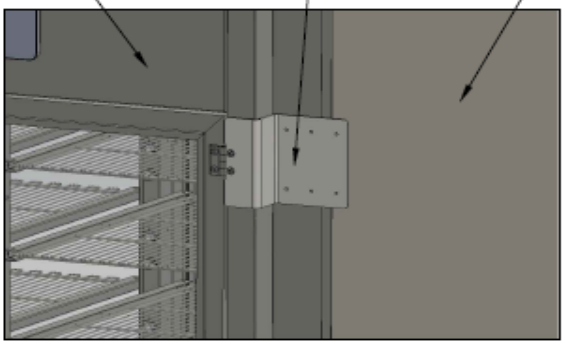

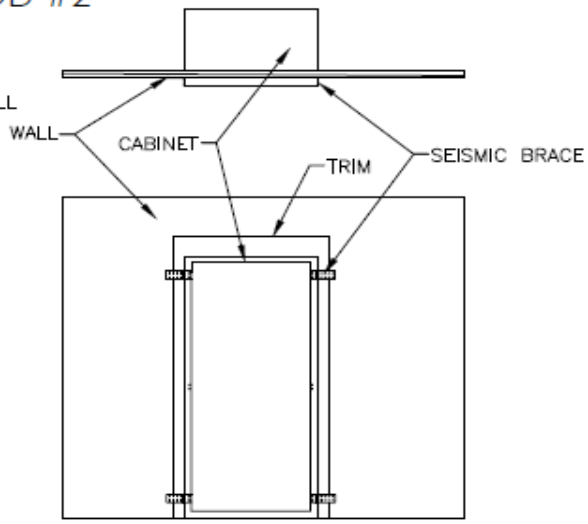

STERIS Corporation

TITLE	SIZE:	SCALE:	DRAWN BY:	DRAWING NUMBER:	PART NUMBER:	REVISION:
EQUIPMENT_DRAWING AMSCO_DRYING_CABINET SEISMIC_INSTALLATION	A	NTS	TYLER_BASCH	11003253	11003253	B

This document contains confidential and proprietary information of STERIS Corporation. Neither this document nor the information herein are to be reproduced, either in part or in whole, except as specifically authorized by STERIS Corporation.

SHEET 5 OF 6

901 Montgomery Street
Decorah, IA 52101

PHONE 563-382-2911
FAX 563-387-3102

WinnMed

PHYSICAL SPECIFICATIONS		
SHIPPING DIMENSIONS	34 in x 53 in x 96in [0.86 m x 1.35 m x 2.44 m]	
SHIPPING WEIGHT	29 INCH UNIT	38 INCH UNIT
	750 LB [340 KG]	850 LB [386 KG]
OPERATING WEIGHT (LOADED)	29 INCH UNIT	38 INCH UNIT
	650 LB [295 KG]	750 LB [340 KG]
OPERATING CONDITIONS	63°F - 77°F (17°C - 25°C) at 20% - 60% RH	
A-WEIGHTED SOUND POWER LEVEL	53 dBa	
HEAT LOSS	2500 BTU/HR at 70°F (21°C)	
ELECTRICAL	110 - 120VAC 20AMP DEDICATED WALL PLUG (AS SHOWN)	

CORD

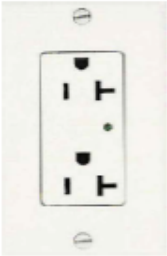

WALL PLUG

INSTALLATION NOTES:

1. ALL DIMENSIONS ARE IN INCHES AND [MM].
2. THE INSTALLATION OF THE HEATING CABINET MUST MEET ALL FEDERAL, STATE AND LOCAL REGULATIONS (NEC IN U.S., IEC IN EU AND CEC IN CANADA).
3. INSTALLATION SPECIFICATIONS IS LISTED AS ENGINEERING AND INSTALLATION GUIDES.
4. REFERENCED COMPONENTS AND SERVICE CONNECTIONS ARE NOT FURNISHED AS PART OF EQUIPMENT UNLESS UNDER WRITTEN AGREEMENT WITH STERIS.
5. IT IS RECOMMENDED THAT THE HEATING CABINET BE INSTALLED IN AN AREA WITH A VENTILATION SYSTEM.
6. POWER CORD GRAY NEMA 5-20P TO IEC 320-C15 SJT TO BE INCLUDED WITH CABINET 10.0FT LONG.
7. FOR PASS THROUGH UNITS, WALL THICKNESS IS AT 3.5-6" (8.5" MAX WITHOUT SEISMIC KIT OR 6.5" MAX WITH SEISMIC KIT).
8. PASS-THROUGH CABINETS WITHOUT SEISMIC KITS MAY BE MOUNTED FLUSH WITH WALL.
9. SEISMIC BRACKETS COME WITH 1" SCREWS TO ATTACH TO CABINET. HARDWARE TO ATTACH TO WALL IS NOT INCLUDED.
10. IF TRIM KIT IS USED, TRIM MAY NEED TO BE CUT AROUND SEISMIC BRACKETS.
11. LEVELING FEET ARE PROVIDED FOR PROPER INSTALLATION.
12. SERVICE CLEARANCE MUST BE MAINTAINED TO ALLOW ACCESS TO HEATING CABINET FOR SERVICEABILITY.
13. STERIS ASSUMES NO RESPONSIBILITY FOR CHANGES MADE NECESSARY THROUGH FAILURE TO OBSERVE THE SPECIFICATIONS ON EQUIPMENT DRAWING AND NOTE PAGES. SPECIFICATIONS AND DESCRIPTIONS ARE SUBJECT TO CHANGE WITHOUT NOTICE.

STERIS Corporation

TITLE: EQUIPMENT_DRAWING
AMSCO_DRYING_CABINET
GENERAL_NOTES

SIZE:	SCALE:	DRAWN BY:	DRAWING NUMBER:	PART NUMBER:	REVISION:
A	NTS	TYLER_BASCH	11003253	11003253	B

This document contains confidential and proprietary information of STERIS Corporation. Neither this document nor the information herein are to be reproduced, either in part or in whole, except as specifically authorized by STERIS Corporation.

SHEET 6 OF 6

901 Montgomery Street
Decorah, IA 52101

PHONE 563-382-2911
FAX 563-387-3102

WinnMed

WinnMed **Issue Date:** **3/6/2024**
Expansion and Renovation
Decorah, IA 52101
Furniture Specifications

CONTACT: Ben Stevens - CFO
PHONE NUMBER: 563-387-3109

ITEM NUMBER:	8

ITEM NAME:	Prep & Pack Table		
ROOM NUMBER:		**QUANTITY:**	

SPECIFICATION INFORMATION

MANUFACTURER: Steris
MODEL #: PREP63
DIMENSIONS: 60" W x 30" D x 26.5" - 41.5" H
DESCRIPTION: Height Adjustable Prep and Pack table; deluxe accessories include drawer, magnification light; Shelf; light; back rails

FURNITURE & EQUIPMENT IMAGE

901 Montgomery Street
Decorah, IA 52101

PHONE 563-382-2911
FAX 563-387-3102

WinnMed

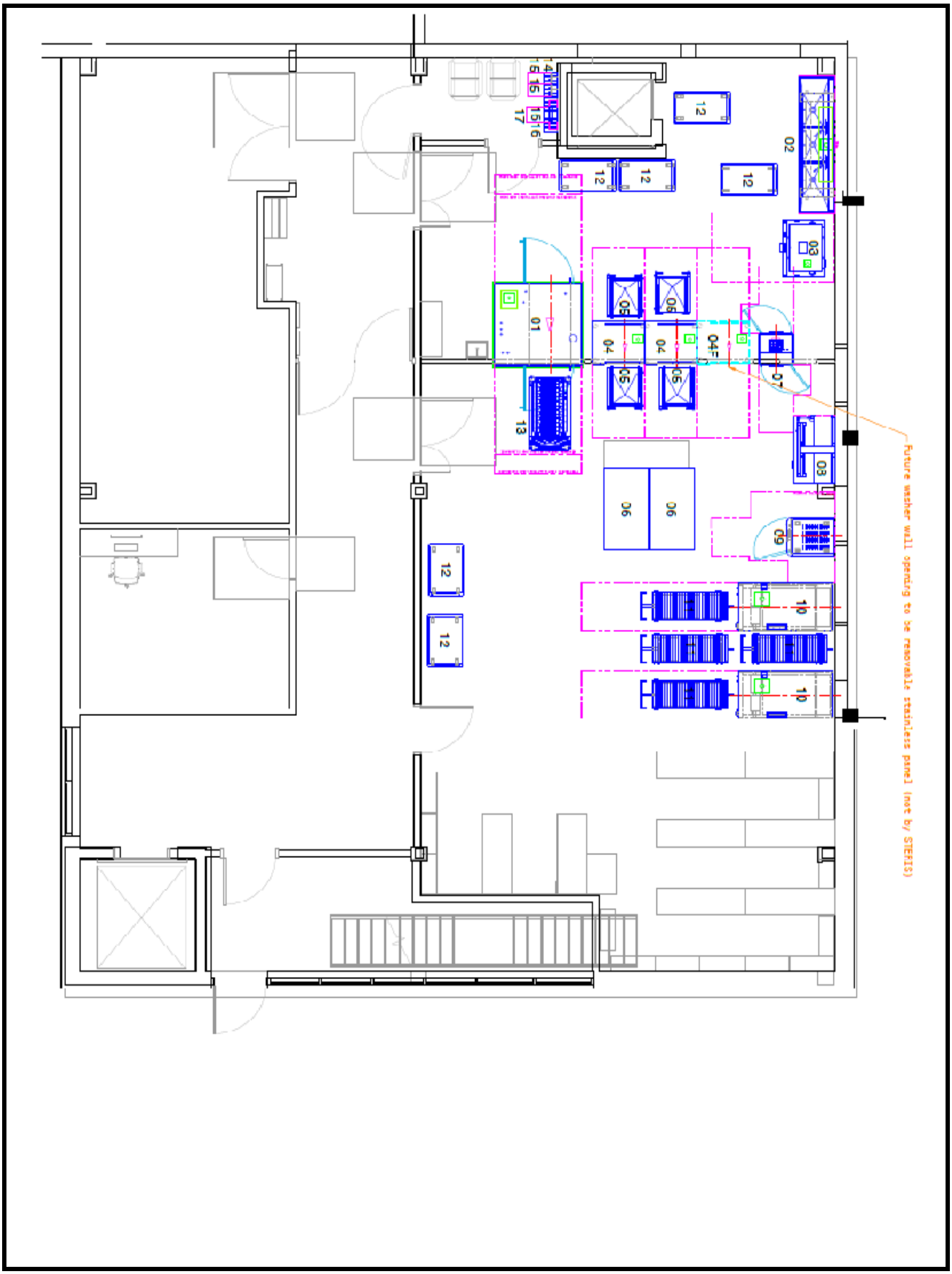

901 Montgomery Street
Decorah, IA 52101

PHONE 563-382-2911
FAX 563-387-3102

WinnMed

WinnMed **Issue Date:** **3/6/2024**
Expansion and Renovation
Decorah, IA 52101
Furniture Specifications

CONTACT: Ben Stevens - CFO
PHONE NUMBER: 563-387-3109

ITEM NUMBER:	9

ITEM NAME:	Low Temp Electric Sterilizer		
ROOM NUMBER:		**QUANTITY:**	

SPECIFICATION INFORMATION

MANUFACTURER: Steris
MODEL #: VP500002101
DIMENSIONS: 33" W x 38.25" D x 72" H
DESCRIPTION: Free-standing low temp electric sterilizer; 50 lbs capacity; daVinci compatible; 200-230 V; 50/60 Hz; 3 Phase; 16 amps

FURNITURE & EQUIPMENT IMAGE

901 Montgomery Street
Decorah, IA 52101

PHONE 563-382-2911
FAX 563-387-3102

WinnMed

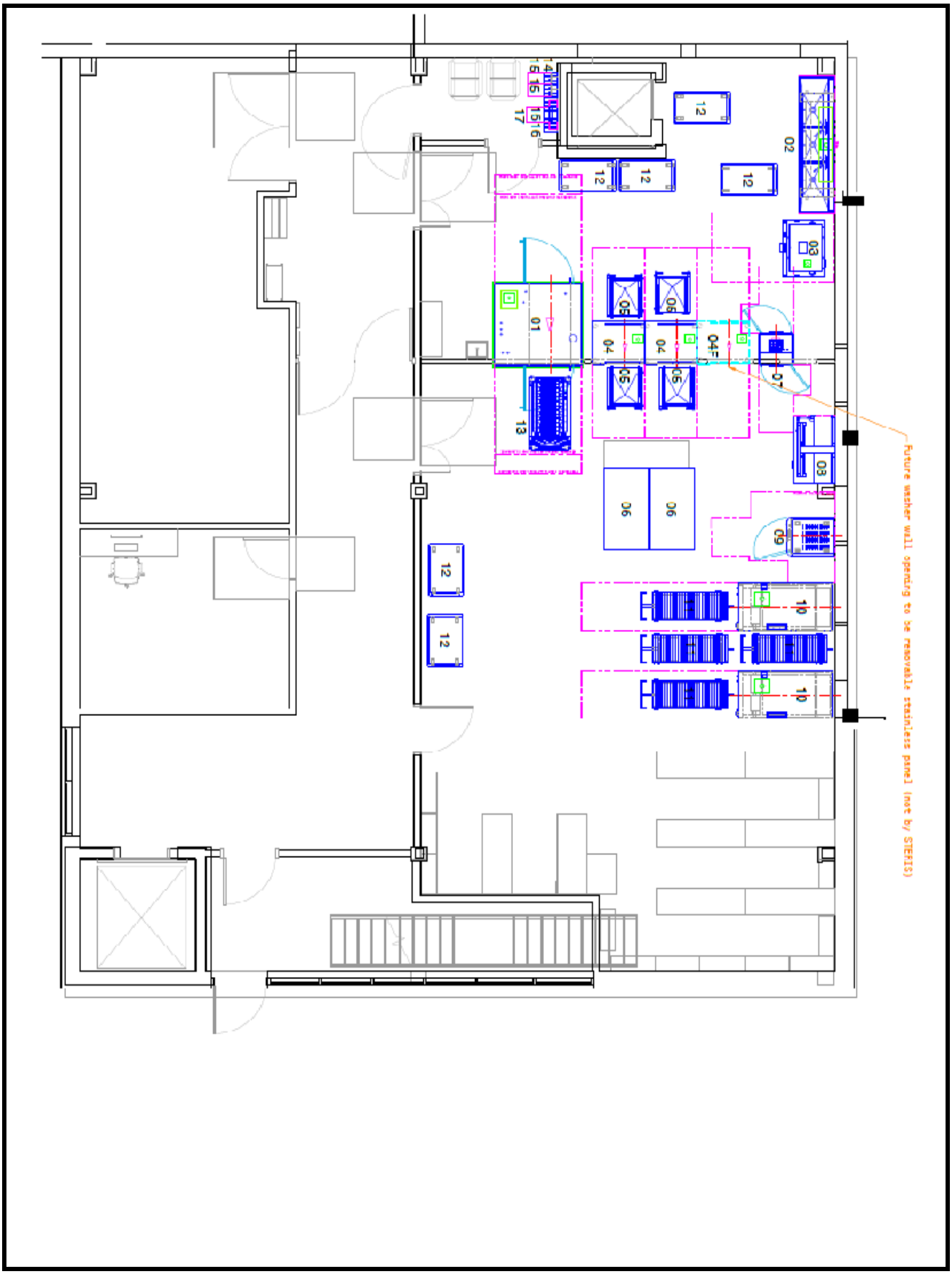

901 Montgomery Street
Decorah, IA 52101

PHONE 563-382-2911
FAX 563-387-3102

WinnMed

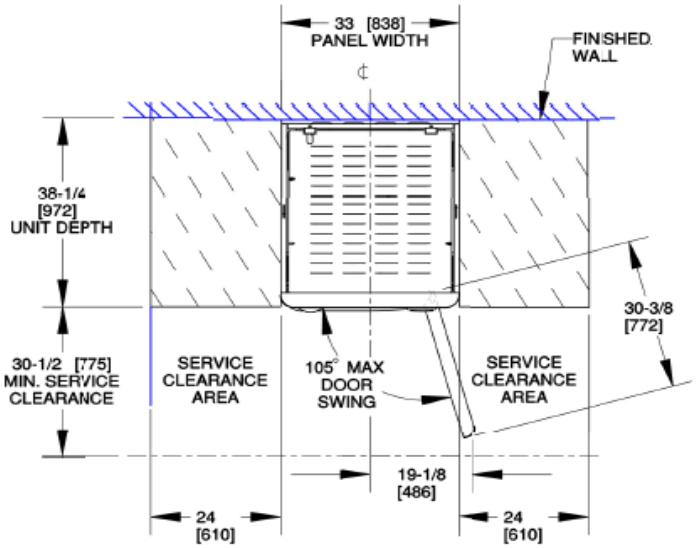

TOP VIEW

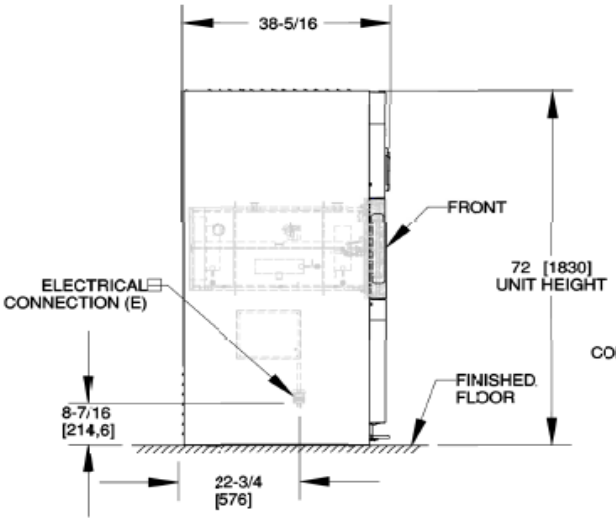

SIDE VIEW

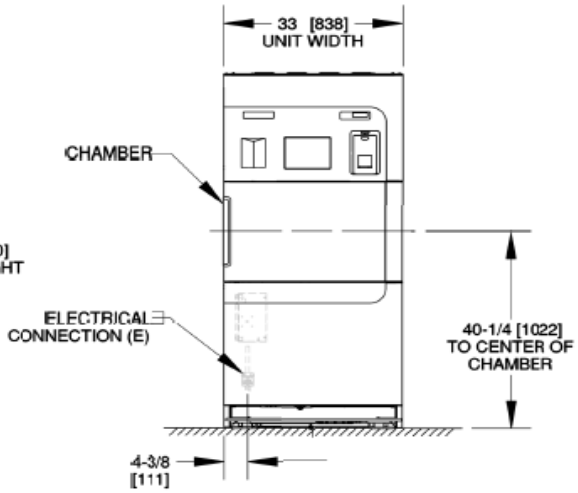

FRONT VIEW

STERIS Corporation

TITLE: SINGLE DOOR CABINET EQUIPMENT DRAWING
AMSCO V-PRO MAX 2

SIZE:	SCALE:	DRAWN BY:	DRAWING NUMBER:	PART NUMBER:	REVISION:
A	NTS	Lambert, Sean	10251899 D.5	10091243	D

This document contains confidential and proprietary information of STERIS Corporation. Neither this document nor the information herein are to be reproduced, either in part or in whole, except as specifically authorized by STERIS Corporation.

SHEET 1 OF 3

901 Montgomery Street
Decorah, IA 52101

PHONE 563-382-2911
FAX 563-387-3102

WinnMed

AMSCO V-PRO MAX 2

UTILITY REQUIREMENTS CHART

UTILITY	PARAMETER	REQUIREMENT	NOTES
ELECTRICAL (E)	DOMESTIC 200-230 VOLTS, 50/60HZ THREE PHASE	CURRENT 16 AMPS, MIN. CIRCUIT BREAKER 20 AMPS, USE NEMA L15-20R PLUG	1. PROVIDE GROUPED OR GANGED CIRCUIT PROTECTION AND DISCONNECT FOR (3) PHASE POWER AS REQUIRED BY NEC AND LOCAL CODES. INDIVIDUAL POWER SHUTOFFS RECOMMENDED NEAR EACH MACHINE FOR SERVICING. 2. PROVIDE GROUNDED METAL CONDUIT AND WIRING BETWEEN EQUIPMENT TERMINALS AND STUB OUTS OR DISCONNECTS. 14 AWG MINIMUM SIZE RECOMMENDED. 3. 10 FT. POWER CORD INCLUDED
	INTERNATIONAL 380-415 VOLTS, 50/60HZ THREE PHASE	CURRENT 10 AMPS, MIN. CIRCUIT BREAKER 12 AMPS, USE NEMA L15-20R PLUG	

PHYSICAL SPECIFICATIONS

SHIPPING WEIGHT, (APPROX)	1020 LBS. (463 KG.)
MAXIMUM OPERATING WEIGHT, BASED ON CHAMBER FULLY LOADED	920 LBS. (417 KG.)
SHIPPING DIMENSIONS W x L x H	49-1/2 X 61 X 87-3/4 (1257.3 X 1549.4 X 2228.85)
OUTSIDE DIMENSIONS W x L x H	33 X 38-5/16 X 72 (838 X 973 X 1829)
CHAMBER DIMENSIONS W x L x H	17 X 32-1/2 X 15 (432 X 381 X 826)
HEAT LOSS AT 70° F (21° C)	1500 BTU/HR
A-WEIGHTED SOUND POWER LEVEL	72.90dB (A) CALCULATED PER ISO 3746

1. LEVELING FEET ARE PROVIDED FOR PROPER INSTALLATION.
2. UNIT WIDTH IS 33". DOOR OPENINGS IN FACILITY MUST BE 36" WIDE OR LARGER TO ACCOMODATE STERILIZER.
3. ALL DIMENSIONS IN INCHES AND [MM].
4. FLOOR SPACE IN LOADING/UNLOADING AREAS OF EQUIPMENT TO BE LEVEL WITHIN 1/16". FOR INSTANCES OF MULTIPLE INSTALLATIONS THIS TOLERANCE SHOULD BE HELD FOR THE ENTIRE SPAN OF INSTALLED EQUIPMENT.
5. SERVICE CLEARANCE MUST BE MAINTAINED TO ALLOW ACCESS TO STERILIZER FOR SERVICEABILITY.
6. STERIS ASSUMES NO RESPONSIBILITY FOR CHANGES MADE NECESSARY THROUGH FAILURE TO OBSERVE THE SPECIFICATIONS ON EQUIPMENT DRAWING AND NOTE PAGES. SPECIFICATIONS AND DESCRIPTIONS ARE SUBJECT TO CHANGE WITHOUT NOTICE.

INSTALLATION SPECIFICATIONS:

1. THE INSTALLATION OF THE AMSCO V-PRO MAX 2 LOW TEMPERATURE STERILIZATION SYSTEMS MUST MEET ALL FEDERAL, STATE AND LOCAL REGULATIONS (NEC IN U.S., IEC IN EU, AND CEC IN CANADA).
2. INSTALLATION SPECIFICATION IS LISTED AS ENGINEERING AND INSTALLATION GUIDES. REFERENCED COMPONENTS AND SERVICE CONNECTIONS ARE NOT FURNISHED AS PART OF EQUIPMENT UNLESS UNDER WRITTEN AGREEMENT WITH STERIS.
3. PER ANSI/AAMI ST58:2013 OR SUBSEQUENT, THE STERILIZER SHALL BE INSTALLED AND OPERATED IN AN AREA WITH A VENTILATION SYSTEM CAPABLE OF AT LEAST 10 AIR EXCHANGES PER HOUR.
4. STERILIZER MUST BE INSTALLED AND OPERATED IN AN AREA WHERE THE TEMPERATURE IS BETWEEN 59° F AND 86° F (15° C AND 30° C), AND THE RELATIVE HUMIDITY RANGE IS BETWEEN 20% AND 85%.
5. UNIT SHOULD NOT BE INSTALLED IN AN AREA WHICH IS NOT COMPATIBLE WITH OXIDIZERS. CONSULT THE MSDS FOR ANY CHEMICALS THAT MAY BE PRESENT IN ADDITION TO THE MSDS FOR THE HYDROGEN PEROXIDE STERILANT.

STERIS Corporation

TITLE: SINGLE DOOR CABINET EQUIPMENT DRAWING
AMSCO V-PRO MAX 2

SIZE:	SCALE:	DRAWN BY:	DRAWING NUMBER:	PART NUMBER:	REVISION:
A	NTS	Lambert, Sean	10251899 D.5	10091243	D

This document contains confidential and proprietary information of STERIS Corporation. Neither this document nor the information herein are to be reproduced, either in part or in whole, except as specifically authorized by STERIS Corporation.

SHEET 2 OF 3

901 Montgomery Street
Decorah, IA 52101

PHONE 563-382-2911
FAX 563-387-3102

WinnMed

SEISMIC MOUNTS

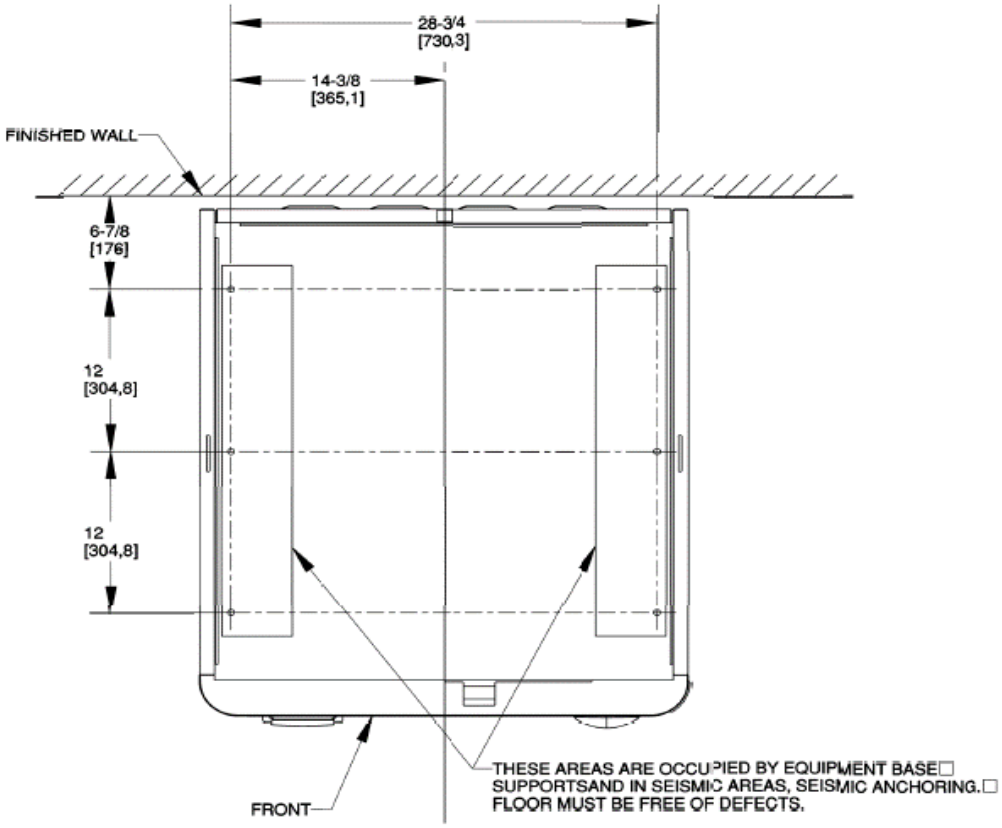

STERIS Corporation

TITLE: SINGLE DOOR CABINET EQUIPMENT DRAWING
AMSCO V-PRO MAX 2

SIZE:	SCALE:	DRAWN BY:	DRAWING NUMBER:	PART NUMBER:	REVISION:
A	NTS	Lambert, Sean	10251899 D.5	10091243	D

This document contains confidential and proprietary information of STERIS Corporation. Neither this document nor the information herein are to be reproduced, either in part or in whole, except as specifically authorized by STERIS Corporation.

SHEET 3 OF 3

901 Montgomery Street
Decorah, IA 52101

PHONE 563-382-2911
FAX 563-387-3102

WinnMed

WinnMed **Issue Date:** **3/6/2024**
Expansion and Renovation
Decorah, IA 52101
Furniture Specifications

CONTACT: Ben Stevens - CFO
PHONE NUMBER: 563-387-3109

ITEM NUMBER:	10

ITEM NAME:	Prevac Steam Sterilizer		
ROOM NUMBER:		**QUANTITY:**	

SPECIFICATION INFORMATION

MANUFACTURER: Steris
MODEL #: EF1301242
DIMENSIONS: 42.25" W x 76.5" D x 89" H
DESCRIPTION: Electric Prevac Steam Sterilizer; Single Door; Vertical Slide; 480V; 45kW Integral Steam Generator; 375 lbs. capacity; touch screen controls; thermal printer; Flush and drain kit; chamber rails; 26.5" W x 26.5" D x 63" H Chamber Dimensions

FURNITURE & EQUIPMENT IMAGE

WinnMed

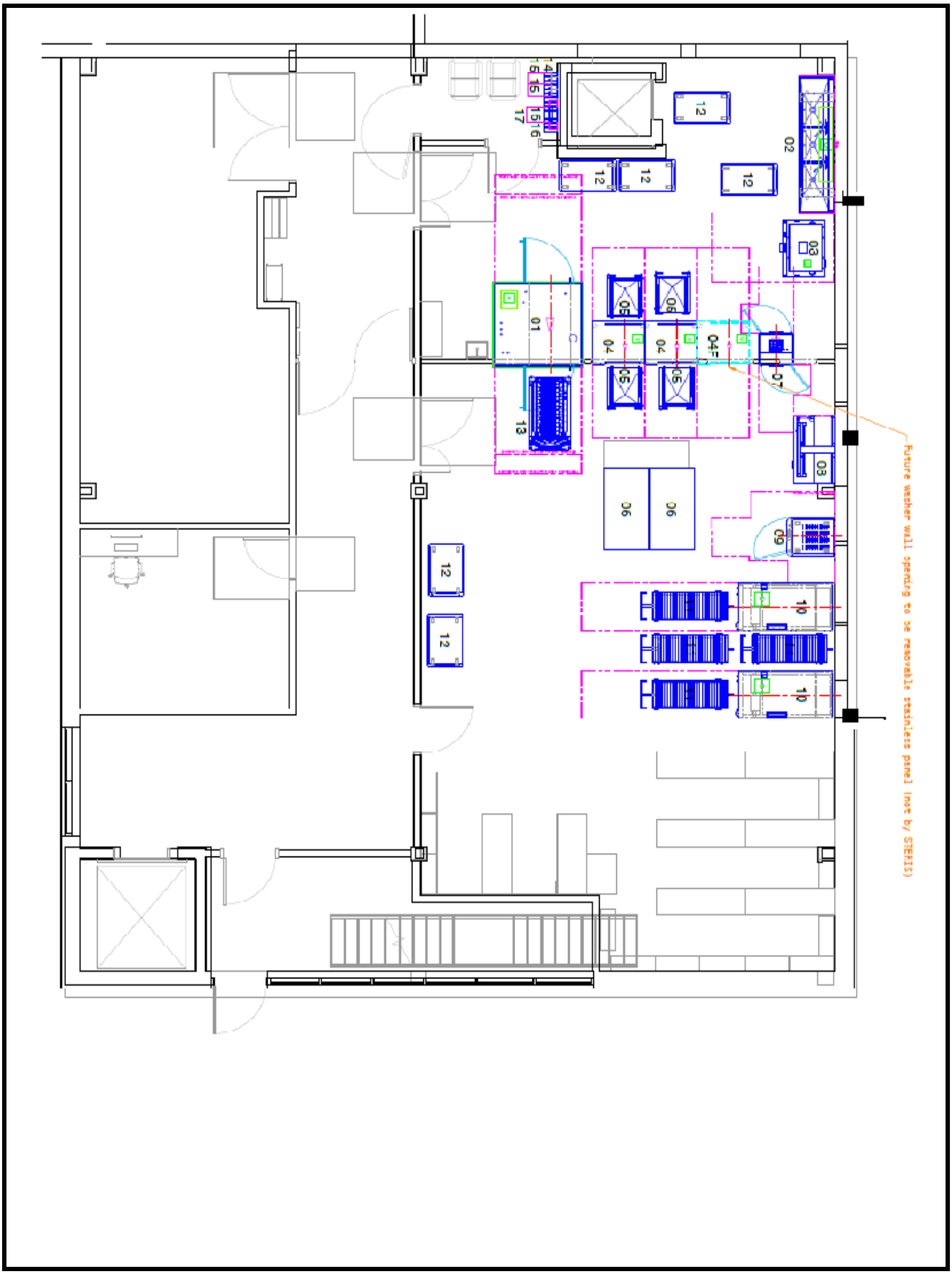

901 Montgomery Street
Decorah, IA 52101

PHONE 563-382-2911
FAX 563-387-3102

WinnMed

STERILIZER MODEL	CHAMBER LENGTH	UNIT LENGTH DIM. 'A'	MINIMUM SERVICE AND LOAD AREA - DIM. 'B'	
			WITHOUT ALUS	WITH ALUS
939V-1	39"	52-7/8" [1343]	78" [1981]	147-1/16" [3735]
1251V-1	51"	64-11/16" [1643]	102" [2591]	182-7/8" [4645]
1563V-1	63"	76-1/2" [1943]	126" [3200]	218-11/16" [5555]

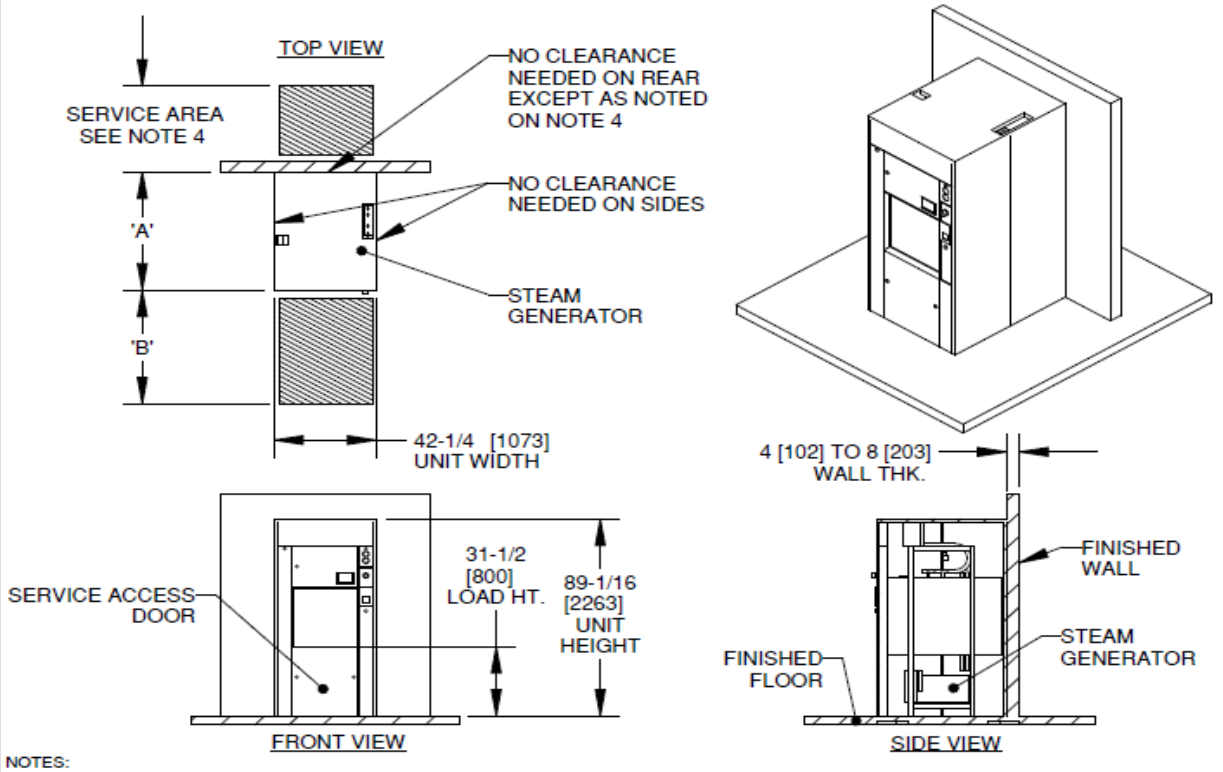

NOTES:
1. THE FLOOR AREA (IN SERVICE AND LOAD/UNLOAD AREAS) MUST BE SMOOTH AND HAVE A LEVEL TOLERANCE WITHIN ±1/2 deg OR ±1/16" PER FOOT, WITHOUT ANY OBSTRUCTIONS SUCH AS PIPING, WIRING, FLOOR SINKS, ETC.
2. SERVICE AND LOADING AREA CLEARANCE OF UNIT SHOULD BE AT UNIT WIDTH.
3. SERVICE AREAS SHOWN ARE SOLELY REPRESENTATIVE OF THE MANUFACTURER'S RECOMMENDED CLEARANCE TO SAFELY PERFORM PREVENTATIVE MAINTENANCE AND REPAIR SERVICES. CUSTOMER IS RESPONSIBLE TO ENSURE CLEARANCES MEET OR EXCEED LOCAL AND NATIONAL CODE REQUIREMENTS. ADHERENCE TO LOCAL AND NATIONAL CODES AND PROCUREMENT OF PERMITS IS THE RESPONSIBILITY OF THE CUSTOMER UNLESS AGREED TO IN WRITING WITH STERIS.
4. PROVIDE 30" TALL SERVICE ACCESS THROUGH WALL FROM BACK OF UNIT IF EQUIPPED WITH FOLLOWING ACCESSORIES:
   a. 30" [760] IF EQUIPPED WITH STERI-GREEN PLUS.
   b. 18" [460] IF EQUIPPED WITH STERI-GREEN.
5. ZERO CLEARANCE NEEDED OUTSIDE OF SERVICE AND LOADING AREAS.
6. CONFIGURATION SHOWN INCLUDES BACK PANEL, WITH PROTRUDING THICKNESS OF 3/16" [5].
7. AUTOMATIC LOAD AND UNLOAD SYSTEM (ALUS) EQUIPMENT DRAWING P/N: 11028378.
8. LOADING EQUIPMENT CART AND TRANSFER CARRIAGE EQUIPMENT DRAWING P/N: 11012876.
9. ALL DIMENSIONS ARE INCHES AND MILLIMETERS [MM].
10. FACILITY DOOR OPENINGS IN PATH TO POINT OF INSTALLATION SHALL BE AT MINIMUM 80" x 40" [2032 x 1016] (HxW).
11. FOR MULTIPLE SIDE BY SIDE STERILIZER INSTALLATIONS, ADD 1/8" PER STERILIZER TO THE TOTAL WALL OPENING TO ALLOW FOR PROPER FIT UP.

STERIS Corporation

TITLE: EQUIPMENT DRAWING, AMSCO 600 , 26.5" X 26.5" X 39", 51" & 63" LG. SLIDING, SD, CABINET, ELECTRIC STEAM GENERATOR

SIZE:	SCALE:	DRAWN BY:	DRAWING NUMBER:	PART NUMBER:	REVISION:
A	-	Gosha, Deon	10778442	11008531	L

This document contains confidential and proprietary information of STERIS Corporation. Neither this document nor the information herein are to be reproduced, either in part or in whole, except as specifically authorized by STERIS Corporation.

SHEET 1 OF 8

901 Montgomery Street
Decorah, IA 52101

PHONE 563-382-2911
FAX 563-387-3102

WinnMed

CW	COLD WATER
DiW	DEIONIZED WATER
D	DRAIN
A	COMPRESSED AIR
GD	STEAM GENERATOR DRAIN
*S	STEAM

*NOTE: THIS UNIT HAS THE CAPABILITY TO BE CONNECTED TO FACILITY STEAM BY REMOVING THE PLUG LOCATED IN THE STEAM INLET PORT AND INSTALL A STERIS SUPPLIED SHUT-OFF VALVE. SHUT-OFF VALVE TO BE PLACED BETWEEN THE STERILIZER AND THE BUILDING STEAM CONNECTION.

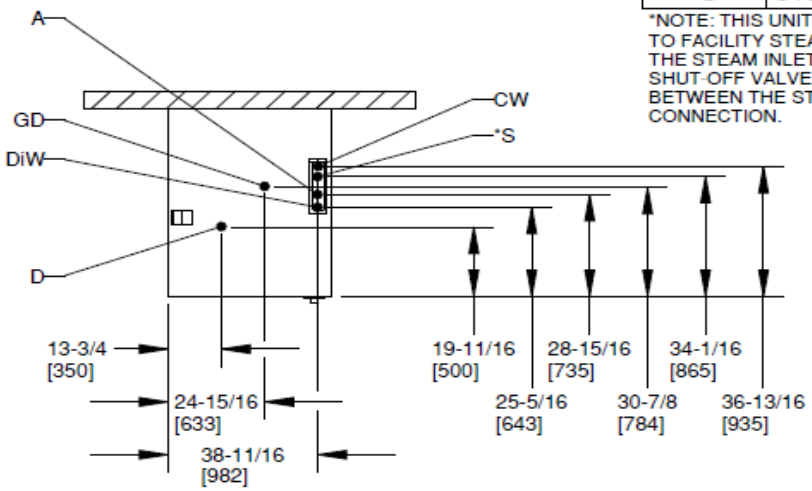

TOP VIEW

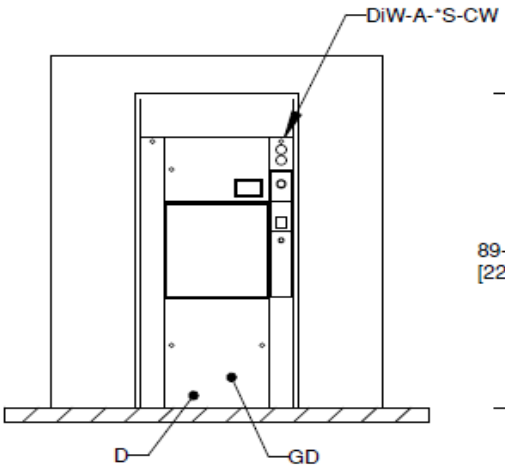

FRONT VIEW

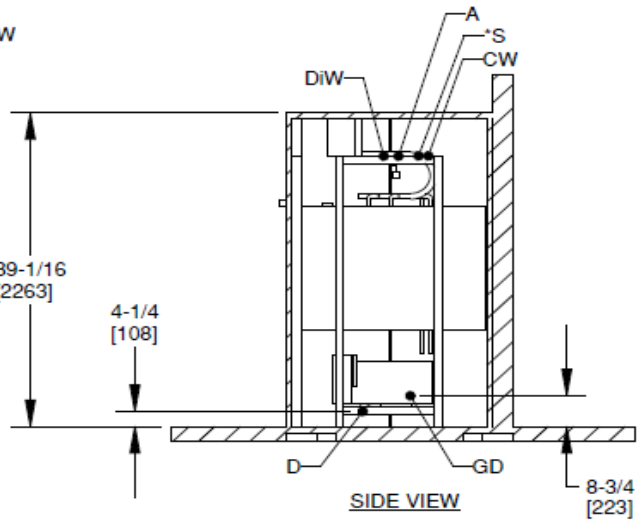

SIDE VIEW

STERIS Corporation

TITLE: EQUIPMENT DRAWING, AMSCO 600 , 26.5" X 26.5" X 39", 51" & 63" LG. SLIDING, SD, CABINET, ELECTRIC STEAM GENERATOR

SIZE:	SCALE:	DRAWN BY:	DRAWING NUMBER:	PART NUMBER:	REVISION:
A	-	Gosha, Deon	10778442	11008531	L

This document contains confidential and proprietary information of STERIS Corporation. Neither this document nor the information herein are to be reproduced, either in part or in whole, except as specifically authorized by STERIS Corporation.

SHEET 2 OF 8

901 Montgomery Street
Decorah, IA 52101

PHONE 563-382-2911
FAX 563-387-3102

WinnMed

E	STERILIZER ELECTRIC
GE	STEAM GENERATOR ELECTRIC
GE1	STEAM GEN. CONTROL ELECTRIC
N	NETWORK

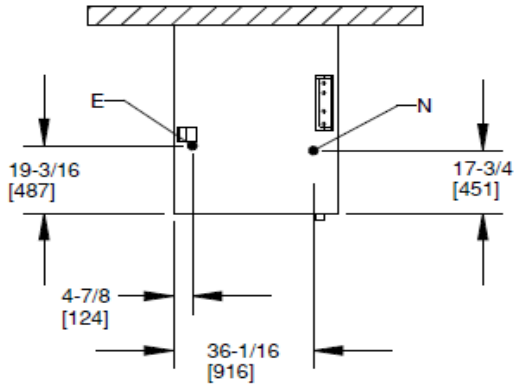

TOP VIEW

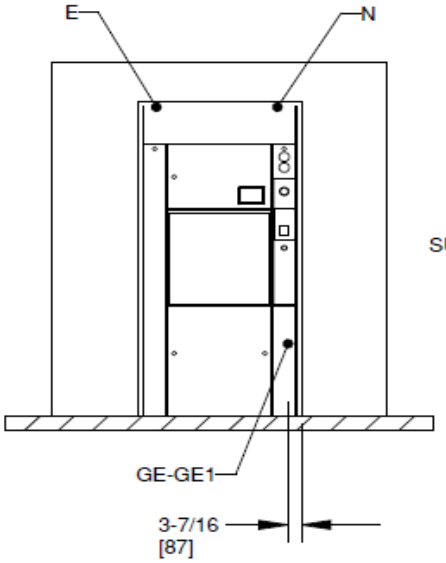

FRONT VIEW

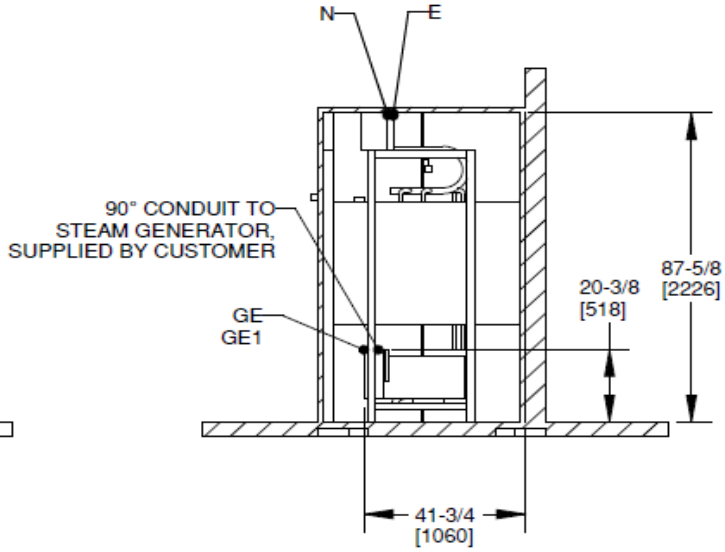

SIDE VIEW

STERIS Corporation

TITLE: EQUIPMENT DRAWING, AMSCO 600 , 26.5" X 26.5" X 39", 51" & 63" LG. SLIDING, SD, CABINET, ELECTRIC STEAM GENERATOR

SIZE:	SCALE:	DRAWN BY:	DRAWING NUMBER:	PART NUMBER:	REVISION:
A	-	Gosha, Deon	10778442	11008531	L

This document contains confidential and proprietary information of STERIS Corporation. Neither this document nor the information herein are to be reproduced, either in part or in whole, except as specifically authorized by STERIS Corporation.

SHEET 3 OF 8

901 Montgomery Street
Decorah, IA 52101

PHONE 563-382-2911
FAX 563-387-3102

WinnMed

JKR	JACKET RELIEF VALVE DISCHARGE PIPE - 1-1/8 ODT
CHR	CHAMBER RELIEF VALVE DISCHARGE PIPE - 1-1/8 ODT
SGR	STEAM GENERATOR RELIEF VALVE DISCHARGE PIPE - 1-1/8 ODT

IMPORTANT: FOR OPTIMAL INSTALLATION, COMPRESSED AIR, WATER, STEAM, NETWORK, & POWER UTILITIES SHOULD BE SUPPLIED BY CUSTOMER FROM ABOVE THE UNIT IN THE LOCATION INDICATED ON THE DRAWING. CONSULT WITH STERIS IF A DEVIATION IS REQUIRED.

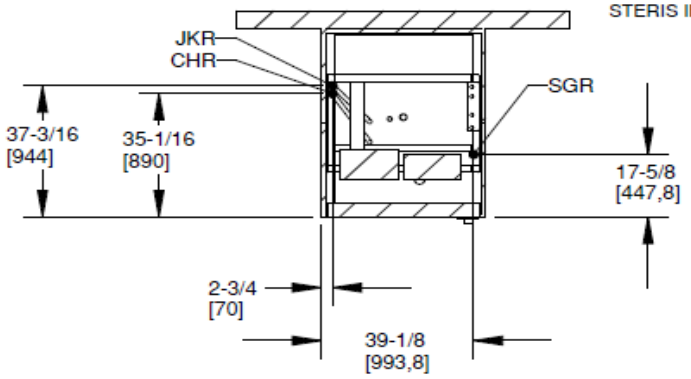

TOP VIEW
(FRONT OF UNIT)

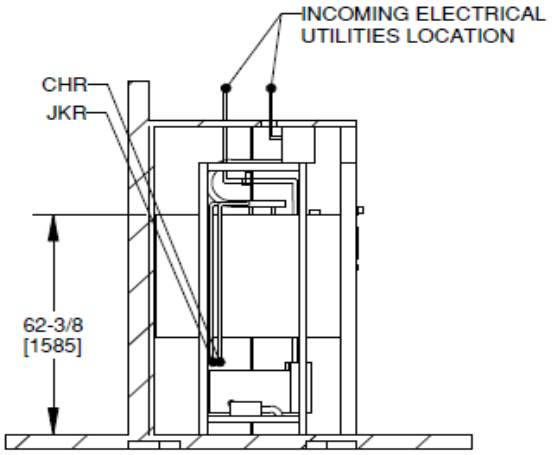

LEFT SIDE VIEW

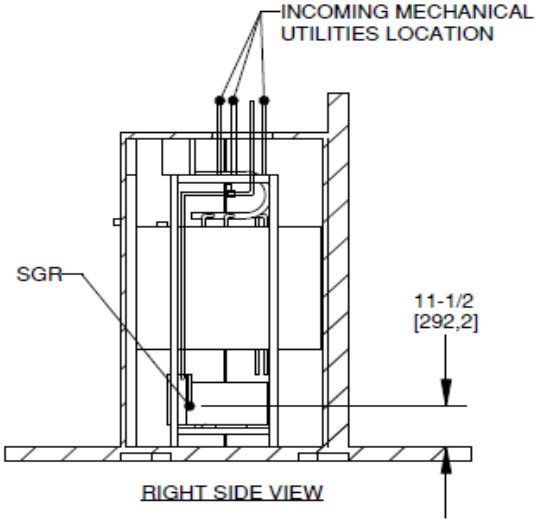

RIGHT SIDE VIEW

STERIS Corporation

TITLE: EQUIPMENT DRAWING, AMSCO 600 , 26.5" X 26.5" X 39", 51" & 63" LG. SLIDING, SD, CABINET, ELECTRIC STEAM GENERATOR

SIZE:	SCALE:	DRAWN BY:	DRAWING NUMBER:	PART NUMBER:	REVISION:
A	-	Gosha, Deon	10778442	11008531	L

This document contains confidential and proprietary information of STERIS Corporation. Neither this document nor the information herein are to be reproduced, either in part or in whole, except as specifically authorized by STERIS Corporation.

SHEET 4 OF 8

901 Montgomery Street
Decorah, IA 52101

PHONE 563-382-2911
FAX 563-387-3102

WinnMed

MECHANICAL

UTILITY REQUIREMENTS CHART

UTILITY	PARAMETER	SPECIFICATIONS
STERILIZER COLD WATER (CW) SEE NOTE 10	CONNECTION SIZE/TYPE	3/4" NPT
	PRESSURE RANGE	20-50 DYNAMIC PSIG (1.4-3.4 BARG)
	TEMPERATURE RANGE	40°-70°F (4°-21°C)
	MIN. FLOW RATE	12 GPM (45 LPM)
	AVERAGE CONSUMPTION	39" LG - PEAK: 12 GPM (45 LPM) PER CYCLE: 97 GAL (367 L) OUT OF CYCLE: 20 GPH (75 LPH)
		51" LG - PEAK: 12 GPM (45 LPM) PER CYCLE: 112 GAL (424 L) OUT OF CYCLE: 25 GPH (95 LPH)
		63" LG - PEAK: 12 GPM (45 LPM) PER CYCLE 128 GAL (484 L) OUT OF CYCLE: 30 GPH (114 LPH)
GENERATOR DEIONIZED WATER (DiW) SEE NOTE 10 AND 11	CONNECTION SIZE/TYPE	1/2" NPT
	SUPPLY TEMP.	70-140°F (21-60°C)
	PRESSURE RANGE	20-50 DYNAMIC PSIG (1.4 - 3.4 BARG)
	FLOW RATE	PEAK: 0.6 GPM (2.3 LPM)
	AVERAGE CONSUMPTION	39" LG - PER CYCLE: 4.2 GAL (16 L) OUT OF CYCLE: 3 GPH (11 LPH)
		51" LG - PER CYCLE: 5.4 GAL (20 L) OUT OF CYCLE: 4 GPH (15 LPH)
		63" LG - PER CYCLE: 6.6 GAL (25 L) OUT OF CYCLE: 5 GPH (19 LPH)
DRAIN (TO FLOOR SINK) (D) SEE NOTE 14	CONNECTION SIZE/TYPE	1-1/2" ODT OPEN
	AVERAGE OPERATING FLOW RATE	GRAVITY DRAIN MUST BE ABLE TO HANDLE PEAK WATER CAPACITY OF 15 GPM (57 LPM), MAX. DISCHARGE TEMP. FROM STERILIZER DRAIN: 140°F (60°C)
	FLOOR SINK MIN. SIZE & ELEVATION	12" X 12" X 6" DEEP MIN. SIZE INSTALL AT FLOOR GRADE
COMPRESSED AIR (A) SEE NOTE 12	CONNECTION SIZE/TYPE	1/2" NPT
	PRESSURE RANGE	80-100 PSIG DYNAMIC 5.5 - 6.9 BARG
	FLOW RATE	3 SCFM (5 SCMH)
	AIR QUALITY	OIL FREE, DRY (DEHUMIDIFIED)
GENERATOR DRAIN (GD) SEE NOTE 13	CONNECTION SIZE/TYPE	1/2 NPT
STEAM INLET (S) SEE NOTE 10	CONNECTION SIZE/TYPE	3/4" NPT
	VAPOR QUALITY	97-100%
	PRESSURE RANGE	50-80 DYNAMIC PSIG (3.4 - 5.5 BARG)
	FLOW RATE	39" LG PEAK: 135 LB/HR (61 KG/HR)
		51" LG PEAK: 181 LB/HR (82 KG/HR)
		63" LG PEAK: 226 LB/HR (103 KG/HR)
	AVERAGE CONSUMPTION	39" LG - PER CYCLE: 35 LB (16 KG) OUT OF CYCLE: 25 LB/HR (11 KG/HR)
		51" LG - PER CYCLE: 45 LB (20 KG) OUT OF CYCLE: 33 LB/HR (15 KG/HR)
		63" LG - PER CYCLE: 55 LB (25 KG) OUT OF CYCLE: 42 LB/HR (19 KG/HR)

NOTES

INSTALLATION SPECIFICATIONS:

1. PIPE SIZES LISTED UNDER PLUMBING REQUIREMENTS INDICATE THE EQUIPMENT TERMINATION SIZES ONLY. SIZE PIPING TO EQUIPMENT DEPENDING ON LENGTH OF PIPE RUN FROM PRESSURE REGULATING STATION FOR THE STEAM LINE AND MAIN WATER HEADERS. SUPPLY THE SPECIFIED SERVICE PRESSURE AND FLOW RATE AT EQUIPMENT TERMINALS, INCLUDE EFFECT OF COINCIDENT DRAW OF MULTIPLE UNIT INSTALLATIONS.
2. PROVIDE PIPING, SHUTOFF VALVE, PIPE PLUGGED TEE, AND UNION IN STEAM AND WATER SUPPLY CONNECTIONS BETWEEN EQUIPMENT AND STUB OUTS. PLUGGED TEE CAN LATER BE USED FOR TEST PRESSURE GAUGE CONNECTION. ARRANGE CONNECTION PIPING TO ALLOW ACCESS TO MACHINE COMPONENTS AND ELECTRICAL CONTROL PANEL.
3. RECOMMENDED PROVISION OF BLOW DOWN VALVE AT EACH STEAM AND WATER STRAINER TO ENABLE STRAINER CLEAN OUT.
4. BLOW DOWN BUILDING (FACILITY) AIR STEAM AND WATER SUPPLY LINES BEFORE FINAL CONNECTION TO THE EQUIPMENT.
5. THE STERILIZER IS NOT SUPPLIED WITH A VACUUM BREAKER OR BACKFLOW PREVENTER. WHERE REQUIRED BY LOCAL CODES, INSTALLATION OF A VACUUM BREAKER IN THE WATER LINE IS SUPPLIED BY OTHER PARTIES. STERIS OFFERS A BACKFLOW PREVENTER AS AN OPTION.
6. PLACEMENT OF PIPING SHUTOFFS, WHEN INSTALLING. SHUTOFF VALVES MUST BE LOCATED IN A SUITABLE POSITION WITHIN THE LINE OF SIGHT, AND CLEAR OF ANY OBSTRUCTIONS THAT PLACE THE SERVICE PERSONNEL IN HARMS WAY, IN ORDER TO TURN THE VALVE OFF.
7. REQUIRED PIPING PRACTICES FOR RELIEF VALVE PIPING CAN BE FOUND IN ASME BOILER CODE AND PRESSURE VESSEL CODE, SECTION VIII (8), PER PARAGRAPH UG-135.
8. FOR GENERAL INSTALLATION INFORMATION SEE STERIS DRAWING NUMBER 62941-091.
9. FOR MULTIPLE UNITS INSTALLATION, SET LOAD HEIGHT (DISTANCE BETWEEN FLOOR TO BOTTOM OF CHAMBER) WITHIN ±1/16" FOR ALL UNITS.
10. FOR FEED WATER AND STEAM QUALITY SEE STERIS DRAWING NUMBER 62941-091.
11. MINIMUM RESISTIVITY: 1 MΩ*cm (1 MEGA-OHM * cm), PER ASME PEB-5.3. MINIMUM CONDUCTIVITY:1µS/CM.
12. OPTIONAL AIR COMPRESSOR IS AVAILABLE: CONTACT STERIS FOR MORE INFORMATION.
13. FOR UNITS WITHOUT FLUSH AND DRAIN OPTION, PLUMB STEAM GENERATOR DRAIN "GD" TO FLOOR SINK ON SITE. PIPING PROVIDED BY CUSTOMER.
14. CUSTOMER SUPPLIED DRAIN EXTENSION SHOULD BE ANCHORED.
15. IN CYCLE CONSUMPTION DATA BASED ON PREVAC OF 270°F, 4 MINUTE STERILIZE, 30 MINUTE DRY WITH METAL LOAD.

STERIS Corporation

TITLE: EQUIPMENT DRAWING, AMSCO 600 , 26.5" X 26.5" X 39", 51" & 63" LG. SLIDING, SD, CABINET, ELECTRIC STEAM GENERATOR

SIZE:	SCALE:	DRAWN BY:	DRAWING NUMBER:	PART NUMBER:	REVISION:
A	-	Gosha, Deon	10778442	11008531	L

This document contains confidential and proprietary information of STERIS Corporation. Neither this document nor the information herein are to be reproduced, either in part or in whole, except as specifically authorized by STERIS Corporation.

SHEET 5 OF 8

901 Montgomery Street
Decorah, IA 52101

PHONE 563-382-2911
FAX 563-387-3102

WinnMed

ELECTRICAL

UTILITY REQUIREMENTS CHART

UTILITY	PARAMETER	SPECIFICATIONS
STERILIZER ELECTRIC (E)	208-240 VAC THREE PHASE 3 WIRE AND GROUND 60 HZ	CURRENT 10 AMPS, RECOMMENDED PROTECTION 20 AMPS, #12 [3.31] AWG
	380-415 VAC THREE PHASE 3 WIRE AND GROUND 50/60 HZ	CURRENT 7 AMPS, RECOMMENDED PROTECTION 20 AMPS, #12 [3.31] AWG
	440-480 VAC THREE PHASE 3 WIRE AND GROUND 60 HZ	CURRENT 7 AMPS, RECOMMENDED PROTECTION 20 AMPS, #12 [3.31] AWG
STEAM GENERATOR ELECTRIC (GE) SEE NOTE 6	208 VAC THREE PHASE 3 WIRE AND GROUND 50/60 HZ	CURRENT 119 AMPS AT 208V, RECOMMENDED PROTECTION 150 AMPS, 1/0 [53.49] AWG
	220-240 VAC THREE PHASE 3 WIRE AND GROUND 50/60 HZ	CURRENT 113 AMPS AT 230V, RECOMMENDED PROTECTION 150 AMPS, 1/0 [53.49] AWG
	380-415 VAC THREE PHASE 3 WIRE AND GROUND 50/60 HZ	CURRENT 64 AMPS AT 400V, RECOMMENDED PROTECTION 80 AMPS, 4 [21.15] AWG
	440-480 VAC THREE PHASE 3 WIRE AND GROUND 50/60 HZ	CURRENT 57 AMPS AT 460V, RECOMMENDED PROTECTION 80 AMPS, 4 [21.15] AWG
STEAM GENERATOR CONTROL (GE1)	120 VAC SINGLE PHASE 2 WIRE AND GROUND 50/60 HZ	CURRENT 10 AMPS, RECOMMENDED PROTECTION 20 AMPS, #12 [3.31] AWG
NETWORK (N)	AREA NETWORK	100/1000 BASE T SUPPORTING TCP/IP PROTOCOL RJ45F CONNECTION
POWER CONSUMPTION PER CYCLE	26" X 26" X 39" LG	12.3 KWH
	26" X 26" X 51" LG	15.8 KWH
	26" X 26" X 63" LG	19.3 KWH

NOTES

ELECTRICAL UTILITY REQUIREMENTS

1. ALL CONNECTIONS SHOULD BE IN ACCORDANCE WITH LOCAL CODES.
2. ALWAYS FOLLOW LOCAL ELECTICAL CODES AND SAFETY-RELATED WORK PRACTICES TO DETERMINE THE VALUE OF PRODUCTION.
3. DISCONNECT SWITCHES WITH OFF POSITION LOCKOUT (SUPPLIED BY OTHERS) MUST BE INSTALLED IN ELECTRIC SUPPLY LINES THAT ARE NOT SUPPLIED BY STERIS.
4. STERIS RECOMMENDS A LAMP IN SERVICE AREA TO ILLUMINATE THE SURROUNDING SPACE.

INSTALLATION SPECIFICATIONS:

1. PROVIDE GROUPED OR GANGED CIRCUIT PROTECTION AND DISCONNECT FOR STERILIZER POWER AS REQUIRED BY CODES AND STANDARDS. INDIVIDUAL POWER SHUTOFFS REQUIRED PER STANDARDS. INDIVIDUAL POWER SHUTOFFS REQUIRED NEAR MACHINE FOR SERVICING.
2. SEPERATE DISCONNECTS ARE REQUIRED FOR 3-PH TO GENERATOR HEATERS AND 1-PH TO ELECTRIC STEAM GENERATOR CONTROL.
3. PROVIDE GROUNDED METAL CONDUIT AND WIRING BETWEEN EQUIPMENT TERMINALS AND STUB OUT OR DISCONNECTS. CHECK LOCAL CODES FOR MINIMUM AWG. WIRE SIZE.
4. PLACEMENT OF ELECTRICAL DISCONNECTS: WHEN INSTALLING; DISCONNECTS MUST BE LOCATED IN SUITABLE LOCATIONS WITHIN LINE OF SIGHT AND CLEAR OF ANY OBSTRUCTIONS THAT WOULD PUT THE SERVICE PERSON OR OPERATOR IN HARMS WAY IN ORDER TO TURN IT OFF. ALSO, THE LOCATION OF THE DISCONNECTS SHOULD ALLOW THE SERVICE PERSON TO SHUTOFF POWER FROM THE SIDE TO PREVENT POSSIBLE ARC FLASH.
5. DO NOT USE GROUND FAULT CURRENT INTERRUPTER (GFCI).
6. MAIN INCOMING POWER WIRING TO HAVE 167°F (75°C) INSULATION RATING MINIMUM, COPPER ONLY.
7. 90° CONDUIT, SUPPLIED BY CUSTOMER, IS REQUIRED FOR INSTALLATION. IT IS LOCATED ON RIGHT SIDE OF STEAM GENERATOR ELECTRIC BOX.

REQUIREMENT NOTES:

CIRCUIT BREAKER IS REQUIRED. INSTALL NEAR EQUIPMENT WITHIN EASY REACH OF THE OPERATOR AND MARKED AS 'DISCONNECTING DEVICE' FOR THE EQUIPMENT.

NETWORK CONNECTION (IF APPLICABLE):
- ACTIVE NETWORK DROP WITH CAT 5/6 CABLE WITHIN 10' OF UNIT
- STATIC OR DHCP RESERVED IP ADDRESS (FOR EACH UNIT)
- NETWORK CABLE SUPPLIED BY FACILITY

STERIS Corporation

TITLE: EQUIPMENT DRAWING, AMSCO 600 , 26.5" X 26.5" X 39", 51" & 63" LG. SLIDING, SD, CABINET, ELECTRIC STEAM GENERATOR

SIZE:	SCALE:	DRAWN BY:	DRAWING NUMBER:	PART NUMBER:	REVISION:
A	-	Gosha, Deon	10778442	11008531	L

This document contains confidential and proprietary information of STERIS Corporation. Neither this document nor the information herein are to be reproduced, either in part or in whole, except as specifically authorized by STERIS Corporation.

SHEET 6 OF 8

901 Montgomery Street
Decorah, IA 52101

PHONE 563-382-2911
FAX 563-387-3102

WinnMed

PHYSICAL

SPECIFICATIONS CHART

CURB WEIGHT	39" LG - 2327 LBS (1056 KG)
	51" LG - 2587 LBS (1173 KG)
	63" LG - 2842 LBS (1289 KG)
MAXIMUM OPERATING WEIGHT SEE NOTE 3	39" LG - 2600 LBS (1179 KG)
	51" LG - 2935 LBS (1331 KG)
	63" LG - 3265 LBS (1481 KG)
SHIPPING WEIGHT	39" LG - 2877 LBS (1305 KG)
	51" LG - 3137 LBS (1423 KG)
	63" LG - 3432 LBS (1557 KG)
SHIPPING DIMENSIONS W x H x L	39" LG - 62 1/2" W x 89 1/4" H x 79 1/2" L [1588 W x 2267 H x 2019 L]
	51" LG - 62 1/2" W x 89 1/4" H x 79 1/2" L [1588 W x 2267 H x 2019 L]
	63" LG - 62 1/2"W x 89 1/4" H x 91 1/2" L [1588 W x 2267 H x 2324 L]
HEAT LOSS AT 21°C (70°F)	HEAT LOSS
939V-1	9600 BTU (10129 kJ)
1251V-1	10400 BTU (10973 kJ)
1563V-1	11300 BTU (11922 kJ)
NOISE LEVEL	64 dB A

1. LEVELING FEET ARE PROVIDED FOR PROPER INSTALLATION. STERILIZER MUST BE LEVELED DURING INSTALLATION. CHECK LEVELNESS FRONT TO BACK, SIDE TO SIDE, AND DIAGONAL.
2. STERIS DOES NOT ASSUME ANY RESPONSIBILITY FOR CHANGES MADE NECESSARY THROUGH FAILURE TO OBSERVE THE SPECIFICATIONS ON THE EQUIPMENT DRAWING AND NOTE SHEETS. SPECIFICATIONS AND DESCRIPTIONS ARE SUBJECT TO CHANGE WITHOUT NOTICE.
3. BASED ON CHAMBER FULLY LOADED WITH INSTRUMENTS.

ADDITIONAL INSTALLATION SPECIFICATIONS NOTES

A. INSTALLATION SPECIFICATION IS LISTED AS ENGINEERING AND INSTALLATION GUIDES. REFERENCED COMPONENTS AND SERVICE CONNECTIONS ARE NOT FURNISHED AS PART OF EQUPMENT UNLESS INSTALLATION IS QUOTED SEPERATELY AND TO BE PERFORMED BY STERIS.

B. PROVIDE GROUPED OR GANGED CIRCUIT PROTECTION AND DISCONNECT FOR STERILIZER POWER AS REQUIRED BY CODES AND STANDARDS. INDIVIDUAL POWER SHUTOFFS REQUIRED NEAR EACH MACHINE FOR SERVICING.

C. PROVIDE GROUNDED METAL CONDUIT AND WIRING BETWEEN EQUIPMENT TERMINALS AND STUB OUTS OR DISCONNECTS. CHECK LOCAL CODES FOR MINIMUM AWG. WIRE SIZE, #16 AWG. MINIMUM RECOMMENDED.

D. FOR GENERAL INSTALLATION INFORMATION SEE STERIS ADDENDUM (DRAWING 62941-091) ATTACHED TO THE END OF THIS DOCUMENT. (THIS DRAWING SHOULD ALWAYS ACCOMPANY THE EQUIPMENT DRAWINGS) IF DRAWING IS NOT INCLUDED, CONTACT STERIS SERVICE ENGINEERING AT 1-800-333-8848 FOR A COPY.

E. EXTERNAL EMERGENCY SHUT-OFF SWITCHES, IF REQUIRED BY LOCAL AUTHORITIES, IS THE REQUIREMENT OF THE CUSTOMER.

F. CUSTOMER TO PROVIDE A STAINLESS STEEL VALVE AT TERMINUS OF PLASTIC UTILITY LINES FOR UTILITY CONNECTIONS. STERIS WILL NOT CONNECT DIRECTLY TO PLASTIC OR PVC PIPE.

STERIS Corporation

TITLE: EQUIPMENT DRAWING, AMSCO 600 , 26.5" X 26.5" X 39", 51" & 63" LG. SLIDING, SD, CABINET, ELECTRIC STEAM GENERATOR

SIZE:	SCALE:	DRAWN BY:	DRAWING NUMBER:	PART NUMBER:	REVISION:
A	-	Gosha, Deon	10778442	11008531	L

This document contains confidential and proprietary information of STERIS Corporation. Neither this document nor the information herein are to be reproduced, either in part or in whole, except as specifically authorized by STERIS Corporation.

SHEET 7 OF 8

901 Montgomery Street
Decorah, IA 52101

PHONE 563-382-2911
FAX 563-387-3102

WinnMed

DRAIN OPTIONS	
D	DRAIN STANDARD
D1	DRAIN, STERIGREEN PLUS, STERIGREEN

FLOOR SINK AND SEISMIC ANCHORS

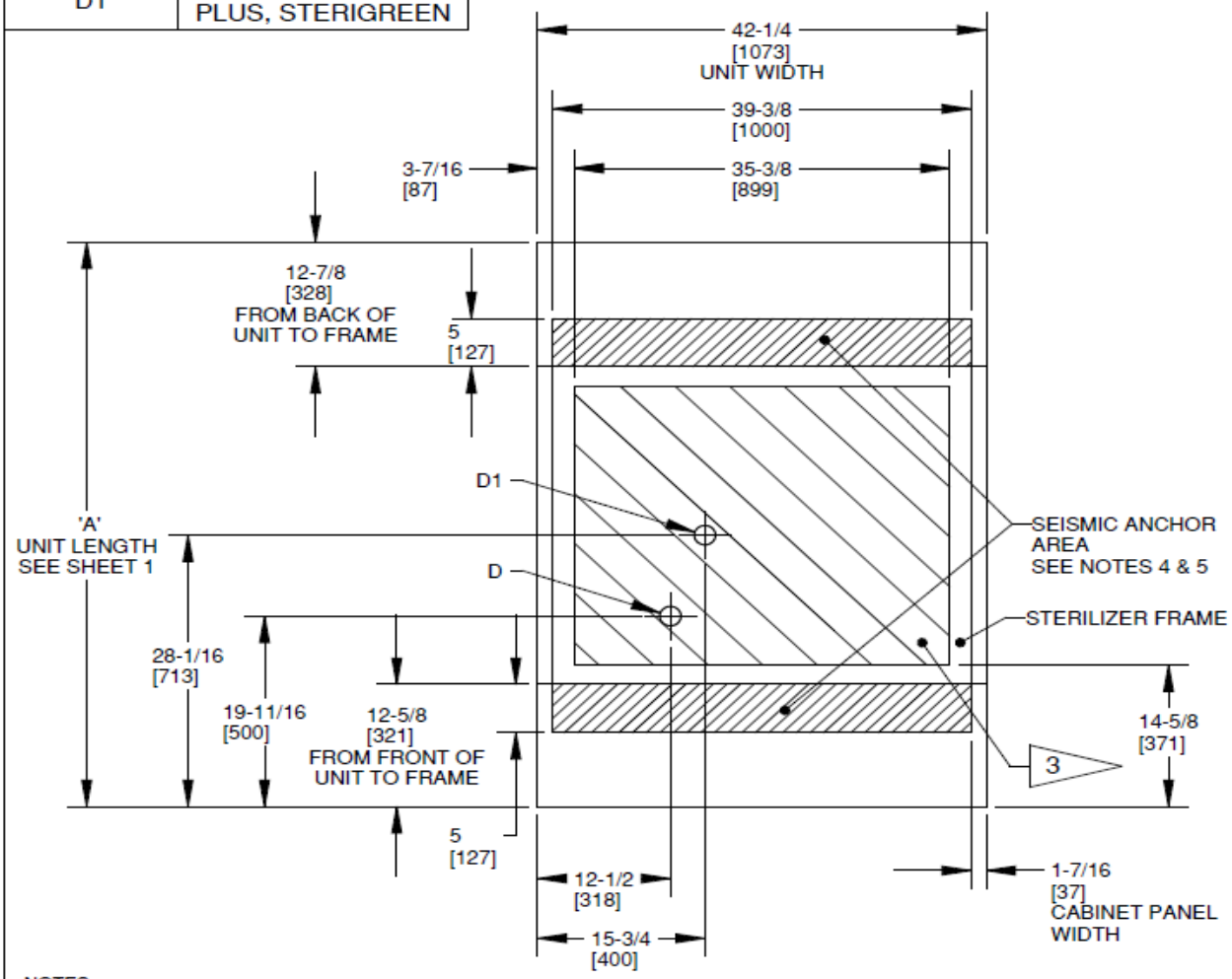

NOTES:

1. ENSURE INSTALLED FLOOR SINK IS ABLE TO HANDLE PEAK WATER CAPACITY PER SHEET 5. DRAIN FIXTURE AND SINK TO BE PROVIDED BY OTHERS.
2. 12" [300] BY 12" [300] MINIMUM FLOOR DRAIN OR SINK IS RECOMMENDED AT CENTER OF DRAIN LOCATION FOR EACH CUBICLE STERILIZER UNIT.
3. FLOOR DRAIN OR SINK SHOULD BE PROVIDED WITHIN THE CONFINES OF THE STERILIZER FRAMEWORK.
4. USE SEISMIC KIT PART NUMBER 11012047 FOR ANCHOR LOCATIONS.
5. VERIFY THAT THE CONCRETE SLAB, TO WHICH THE EQUIPMENT IS SEISMIC ANCHORED, MEETS THE REQUIREMENTS OF THE APPLICABLE ICC, ESR, AND OPM CERTIFICATION.
6. ASSURE ACCESS IS AVAILABLE FOR SEISMIC INSTALLATION.

STERIS Corporation

TITLE: EQUIPMENT DRAWING, AMSCO 600 , 26.5" X 26.5" X 39", 51" & 63" LG. SLIDING, SD, CABINET, ELECTRIC STEAM GENERATOR

SIZE:	SCALE:	DRAWN BY:	DRAWING NUMBER:	PART NUMBER:	REVISION:
A	-	Gosha, Deon	10778442	11008531	L

This document contains confidential and proprietary information of STERIS Corporation. Neither this document nor the information herein are to be reproduced, either in part or in whole, except as specifically authorized by STERIS Corporation.

SHEET 8 OF 8

901 Montgomery Street
Decorah, IA 52101

PHONE 563-382-2911
FAX 563-387-3102

WinnMed

WinnMed **Issue Date:** **3/6/2024**
Expansion and Renovation
Decorah, IA 52101
Furniture Specifications

CONTACT: Ben Stevens - CFO
PHONE NUMBER: 563-387-3109

ITEM NUMBER:	11

ITEM NAME:	Sterilizer Transfer Carriage Cart		
ROOM NUMBER:		**QUANTITY:**	

SPECIFICATION INFORMATION

MANUFACTURER: Steris
MODEL #: AY1598104 & AY1596604
DIMENSIONS: Fixed Height transfer cart; 26" W x 63" D
DESCRIPTION: Fixed height transfer cart (qty 4); Loading Car with 2 Shelves (Qty 4)

FURNITURE & EQUIPMENT IMAGE

901 Montgomery Street
Decorah, IA 52101

PHONE 563-382-2911
FAX 563-387-3102

WinnMed

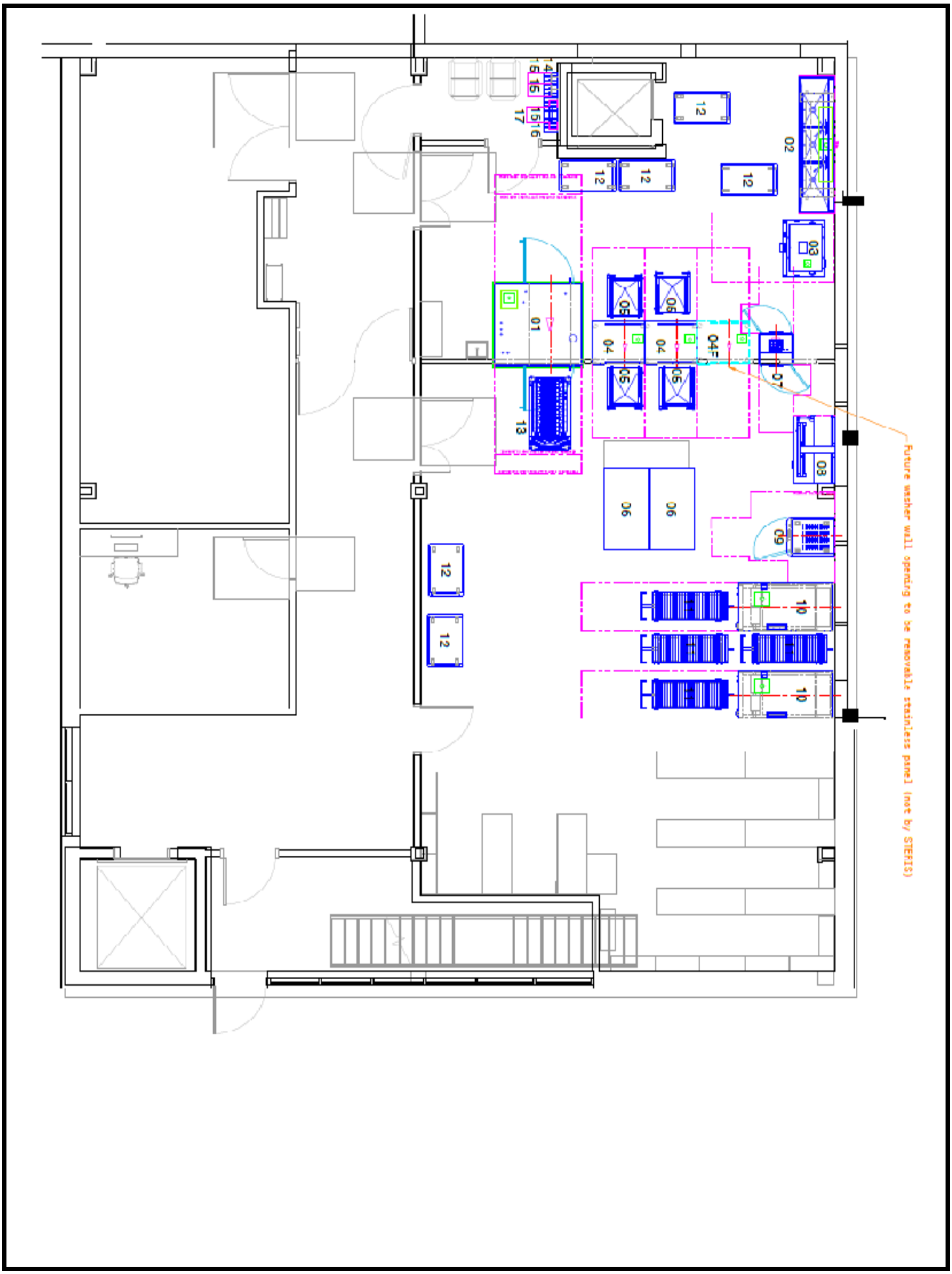

901 Montgomery Street
Decorah, IA 52101

PHONE 563-382-2911
FAX 563-387-3102

WinnMed

WinnMed **Issue Date:** **3/6/2024**
Expansion and Renovation
Decorah, IA 52101
Furniture Specifications

CONTACT: Ben Stevens - CFO
PHONE NUMBER: 563-387-3109

ITEM NUMBER:	12

ITEM NAME:	Case Cart		
ROOM NUMBER:		**QUANTITY:**	

SPECIFICATION INFORMATION

MANUFACTURER: Steris
MODEL #: ACC243739
DIMENSIONS: 28.6" W x 47.3 " D x 39" H
DESCRIPTION: Stainless Steel Case Cart; Doors; locking casters; Integral Bumpers

FURNITURE & EQUIPMENT IMAGE

901 Montgomery Street
Decorah, IA 52101

PHONE 563-382-2911
FAX 563-387-3102

WinnMed

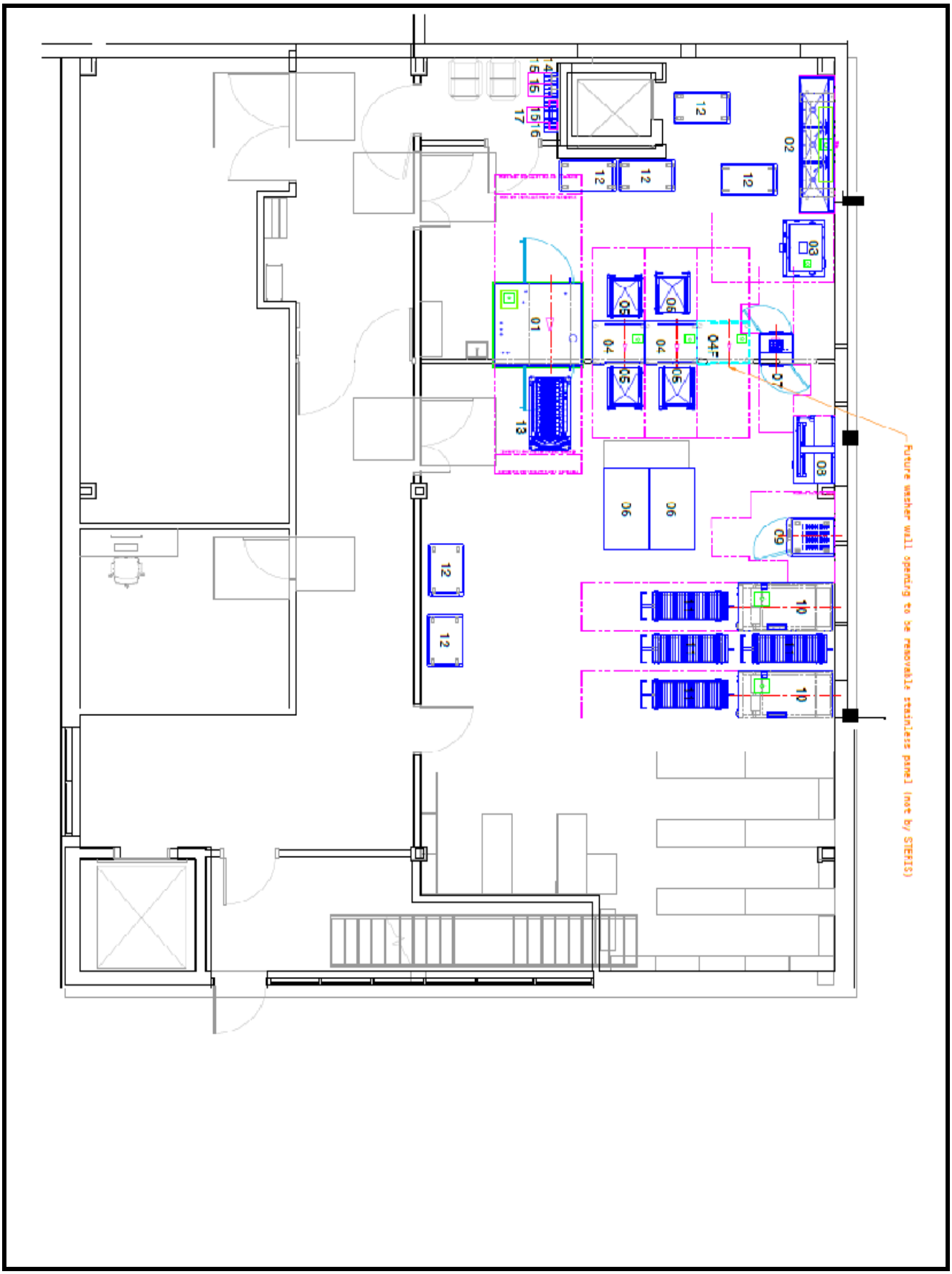

901 Montgomery Street
Decorah, IA 52101

PHONE 563-382-2911
FAX 563-387-3102

WinnMed

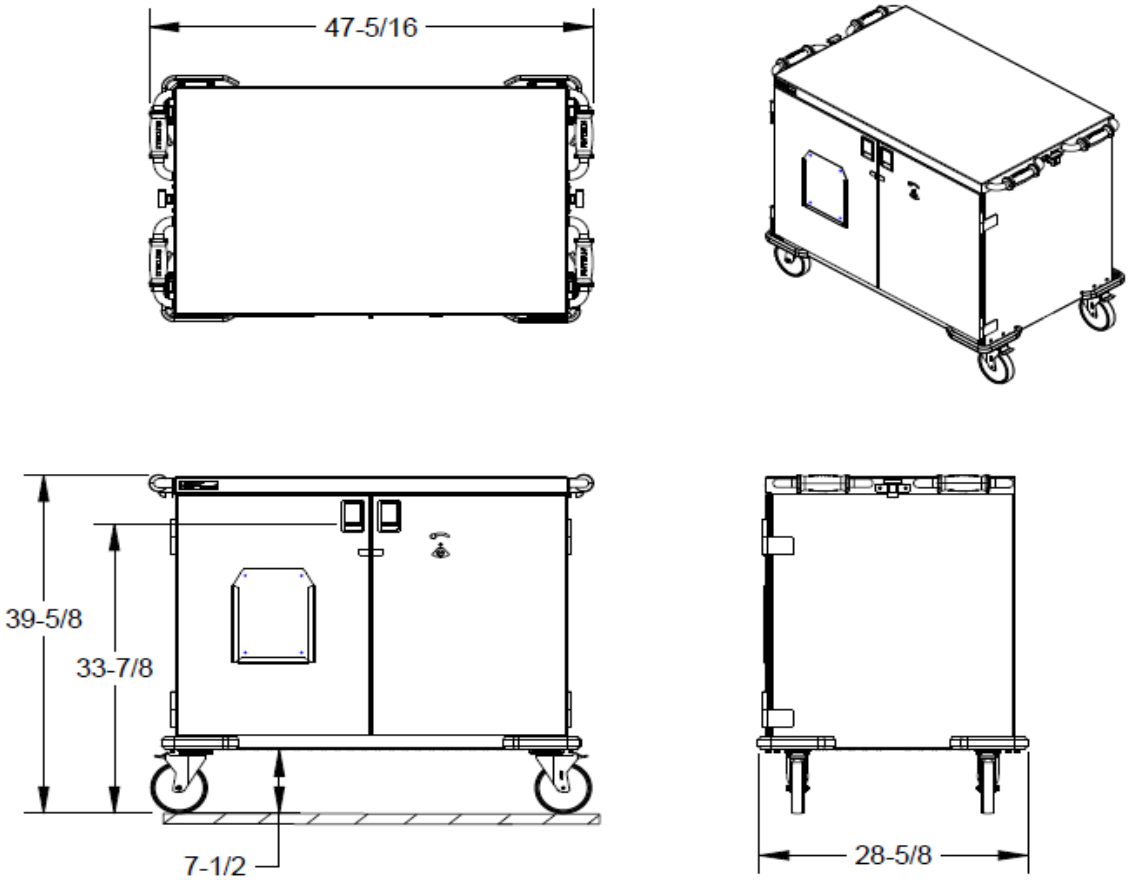

PHYSICAL SPECIFICATIONS	
SHIPPING DIMENSIONS W X L X H	30" x 56-1/2" x 43-3/8" [762mm x 1435mm x 1102mm]
SHIPPING WEIGHT	269 LBS [122kg]
OPERATING DIMENSIONS W X L X H	28-5/8" X 47-5/16" X 39-5/8" [727mm x 1202mm x 1006mm]
OPERATING WEIGHT EMPTY	220 LBS [100kg]
OPERATING TEMPERATURE	41° F TO 200° F [5° C TO 93° C]
MATERIAL	304 STAINLESS STEEL

STERIS Corporation

TITLE: EQUIPMENT DRAWING, CASE CART, 28.6 X 47.3 X 39.6

SIZE:	SCALE:	DRAWN BY:	DRAWING NUMBER:	PART NUMBER:	REVISION:
A	1/400	Anim, Kwaku	ACC243739	11029739	A

This document contains confidential and proprietary information of STERIS Corporation. Neither this document nor the information herein are to be reproduced, either in part or in whole, except as specifically authorized by STERIS Corporation.

SHEET 1 OF 1

901 Montgomery Street
Decorah, IA 52101

PHONE 563-382-2911
FAX 563-387-3102

WinnMed

WinnMed **Issue Date:** **3/6/2024**
Expansion and Renovation
Decorah, IA 52101
Furniture Specifications

CONTACT: Ben Stevens - CFO
PHONE NUMBER: 563-387-3109

ITEM NUMBER:	13

ITEM NAME:	Cart Washer Universal Rack		
ROOM NUMBER:		**QUANTITY:**	

SPECIFICATION INFORMATION

MANUFACTURER: Steris
MODEL #: FD372
DIMENSIONS:
DESCRIPTION: Universal Rack for Cart Washer

FURNITURE & EQUIPMENT IMAGE

901 Montgomery Street
Decorah, IA 52101

PHONE 563-382-2911
FAX 563-387-3102

WinnMed

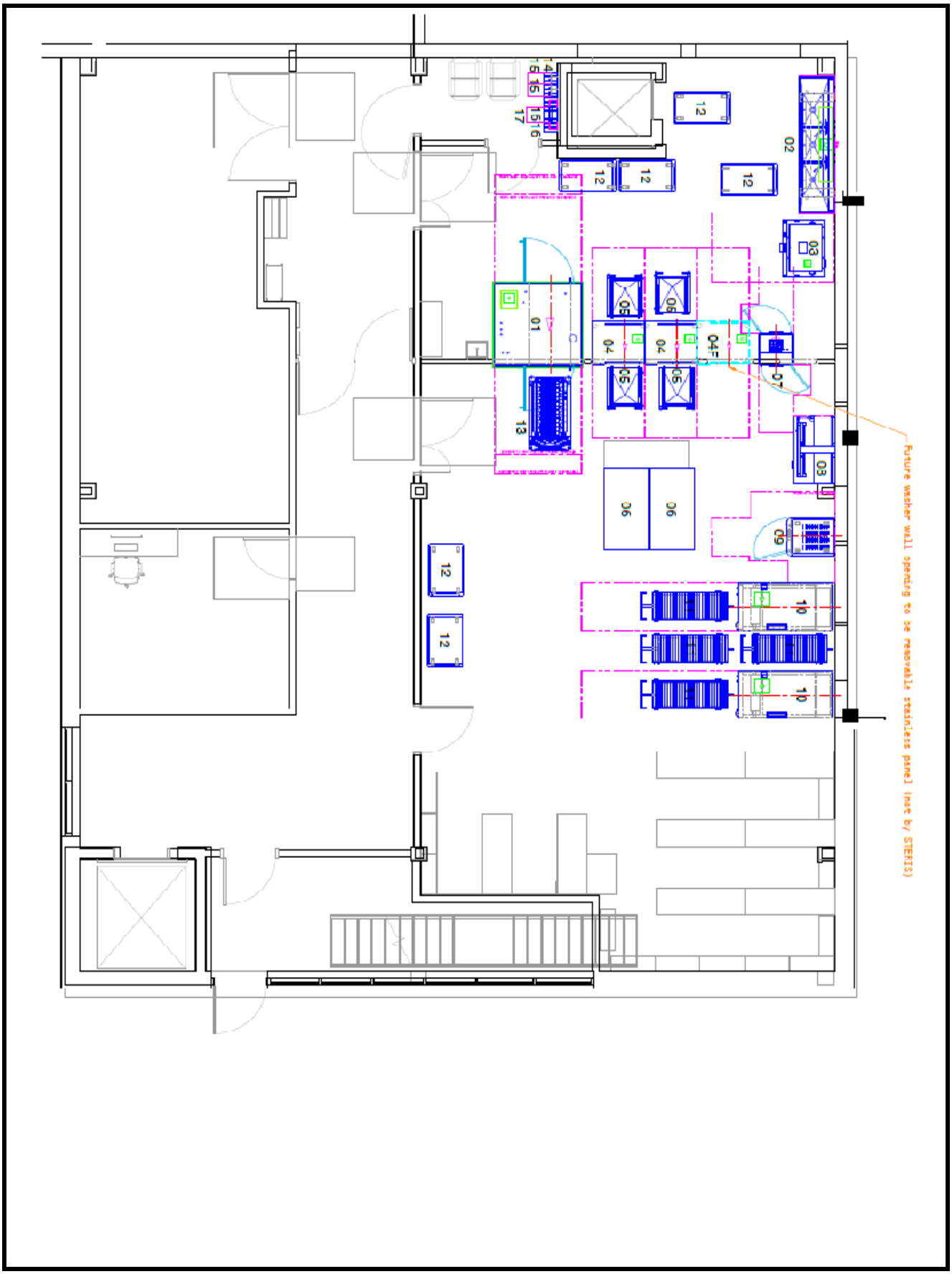

901 Montgomery Street
Decorah, IA 52101

PHONE 563-382-2911
FAX 563-387-3102

WinnMed

WinnMed **Issue Date:** **3/6/2024**
Expansion and Renovation
Decorah, IA 52101
Furniture Specifications

CONTACT: Ben Stevens - CFO
PHONE NUMBER: 563-387-3109

ITEM NUMBER:	14

ITEM NAME:	Acu-Hold System Rail		
ROOM NUMBER:		**QUANTITY:**	

SPECIFICATION INFORMATION

MANUFACTURER: Steris
MODEL #: T635Q0
DIMENSIONS: 38"
DESCRIPTION: Acu-Hold System Rail; 38"; Molded Plastic

FURNITURE & EQUIPMENT IMAGE

WinnMed

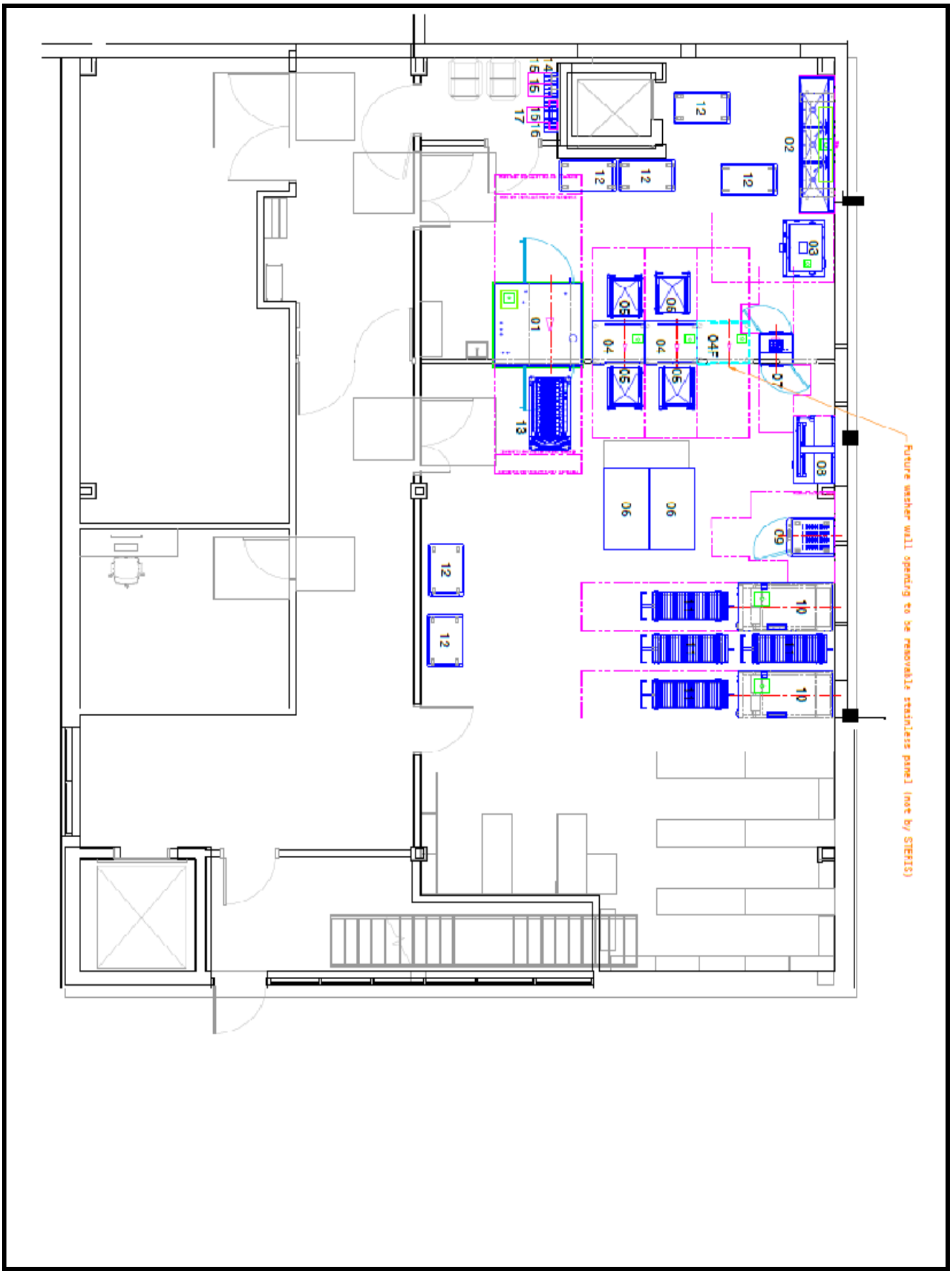

901 Montgomery Street
Decorah, IA 52101

PHONE 563-382-2911
FAX 563-387-3102

WinnMed

WinnMed **Issue Date:** **3/6/2024**
Expansion and Renovation
Decorah, IA 52101
Furniture Specifications

CONTACT: Ben Stevens - CFO
PHONE NUMBER: 563-387-3109

ITEM NUMBER:	15

ITEM NAME:	Digital Radiography System		
ROOM NUMBER:		**QUANTITY:**	

SPECIFICATION INFORMATION

MANUFACTURER: SHIMADZU
MODEL #: RSP-A65-702C
DIMENSIONS:
DESCRIPTION: Digital Radiography System; 65kW Generator; Touch Screen Console; Elevating Table; Ceiling Rail System; Auto Wall Bucky; Workstation w/ 24" Monitor; 3 Phase; 380-480 VAC; 75 KVA; Standard Table Cassette Tray & Housing

FURNITURE & EQUIPMENT IMAGE

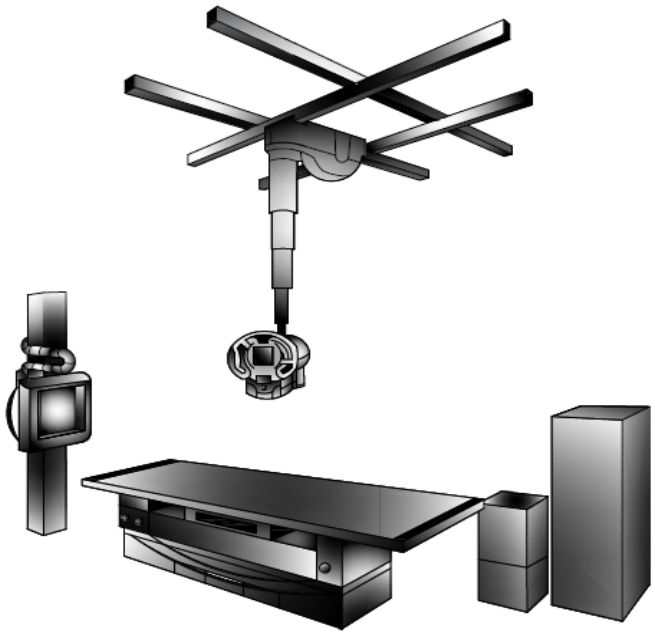

WinnMed

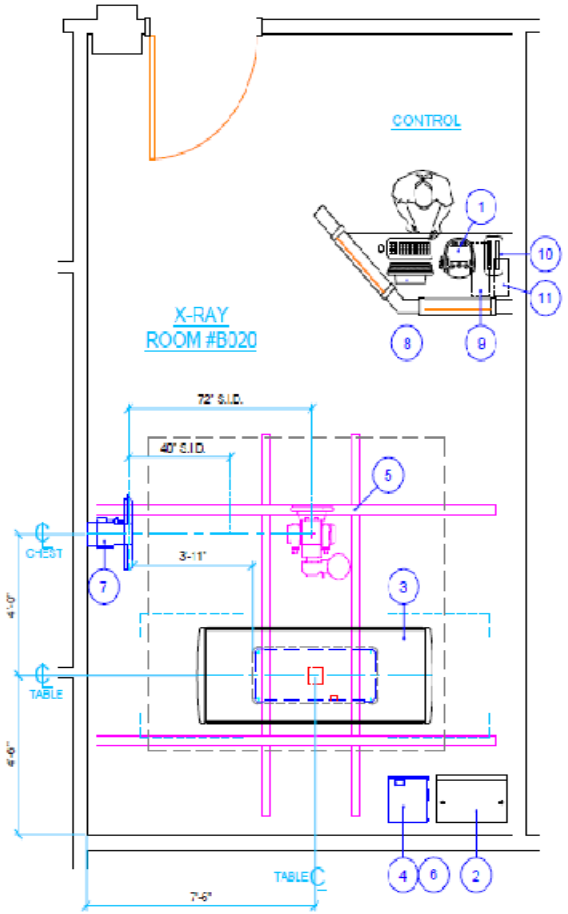

PROPOSED EQUIPMENT LAYOUT

EQUIPMENT SCHEDULE

	EQUIPMENT IDENTIFICATION NUMBER	BTU / HOUR	DESCRIPTION	WEIGHT (LBS.)	DIMENSIONS (IN.) W	x D	x H	
	1	2653	SHIMADZU UD150V-40 65KW X-RAY GENERATOR CONTROL CONSOLE	14.95	3.23	13.99	6	
	2		SHIMADZU UD150V-40 65KW X-RAY GENERATOR CONTROL CABINET (INCLUDES XAT-2 TRANSFORMER)	27.56	15.75	56.88	552	
	3	516	SHIMADZU BK-200 ELEVATING RADIOGRAPHIC TABLE	92.50	32.31	VAR.	705	
	4		SHIMADZU BK-200 TABLE ELECTRONIC CABINET (MOUNTED ON FLOOR)	15.75	15.59	13.81	67	
NOTE 1	5	1707	SHIMADZU CH-200 (4M x 3.3M RAILS) CEILING MOUNTED TUBE SUPPORT	157.50	129.52	112.21	654	
	6		SHIMADZU CH-200 TUBE SUPPORT ELECTRONIC CABINET (STACKED ON BK-200 CABINET)	15.75	12.59	15.69	67	
	7	119	SHIMADZU BR-120 VERTICAL WALL BUCKY	24.81	14.44	84.84	221	
	8	1000	CANON MEDICAL SYSTEMS CXDI DR SYSTEM FLAT SCREEN MONITOR AND STAND	11.81	19.76	21.50	77	
	9		CANON MEDICAL SYSTEMS CXDI DR SYSTEM CONTROL PC UNIT WITH KEYBOARD AND MOUSE	8.00	18.00	18.00	20	
	10		CANON MEDICAL SYSTEMS CXDI DR SYSTEM BATTERY CHARGER	6.50	5.00	2.50	5	
	11	500	CANON MEDICAL SYSTEMS CXDI DR SYSTEM UPS	6.00	13.00	8.00	10	

NOTE 1:
CH-200 VERTICAL COLUMN CONFIGURATION SHOWN IN THIS DRAWING IS "UPPER RIGHT"
INSTALLER MUST ASSEMBLE IN THIS CONFIGURATION - REFER TO DETAIL PAGE 0-1

PHONE 563-382-2911
FAX 563-387-3102

901 Montgomery Street
Decorah, IA 52101

WinnMed

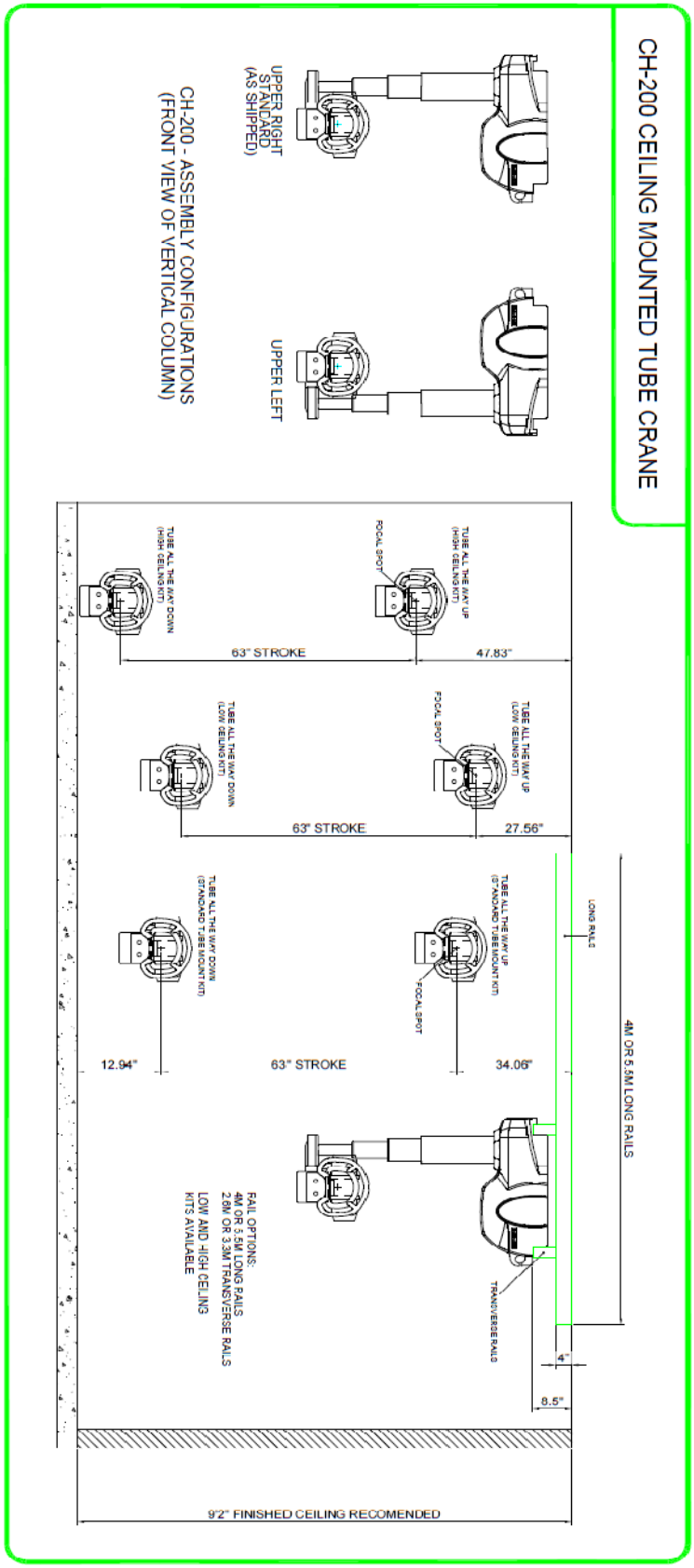

901 Montgomery Street
Decorah, IA 52101

PHONE 563-382-2911
FAX 563-387-3102

WinnMed

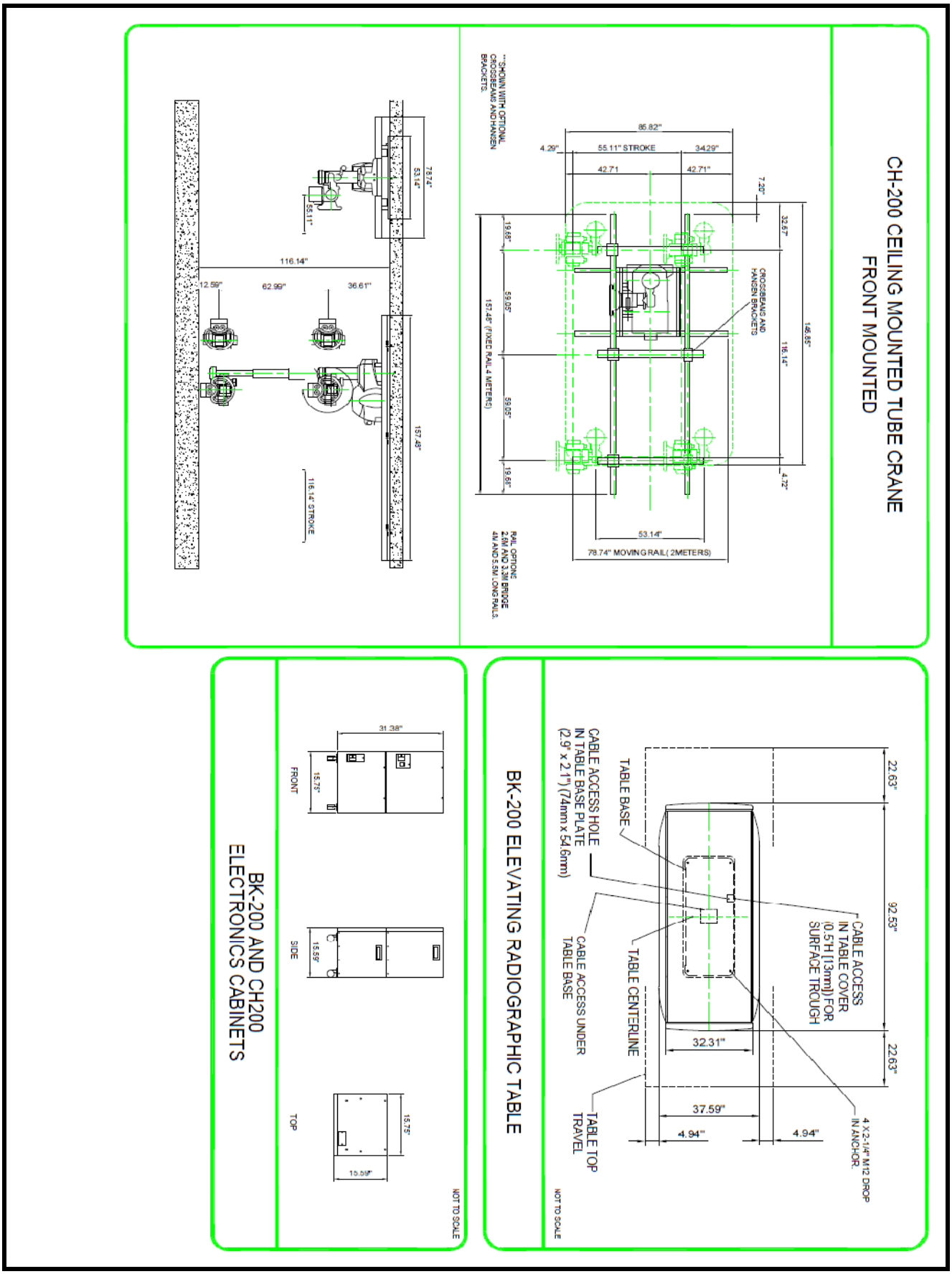

901 Montgomery Street
Decorah, IA 52101

PHONE 563-382-2911
FAX 563-387-3102

WinnMed

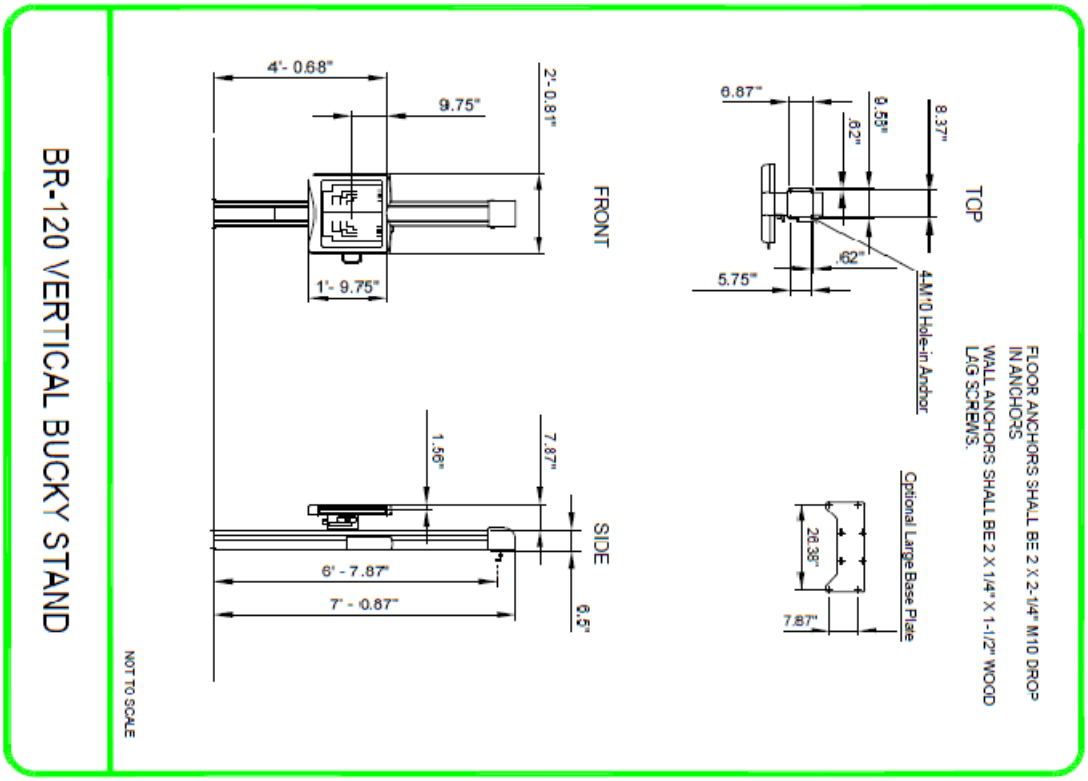

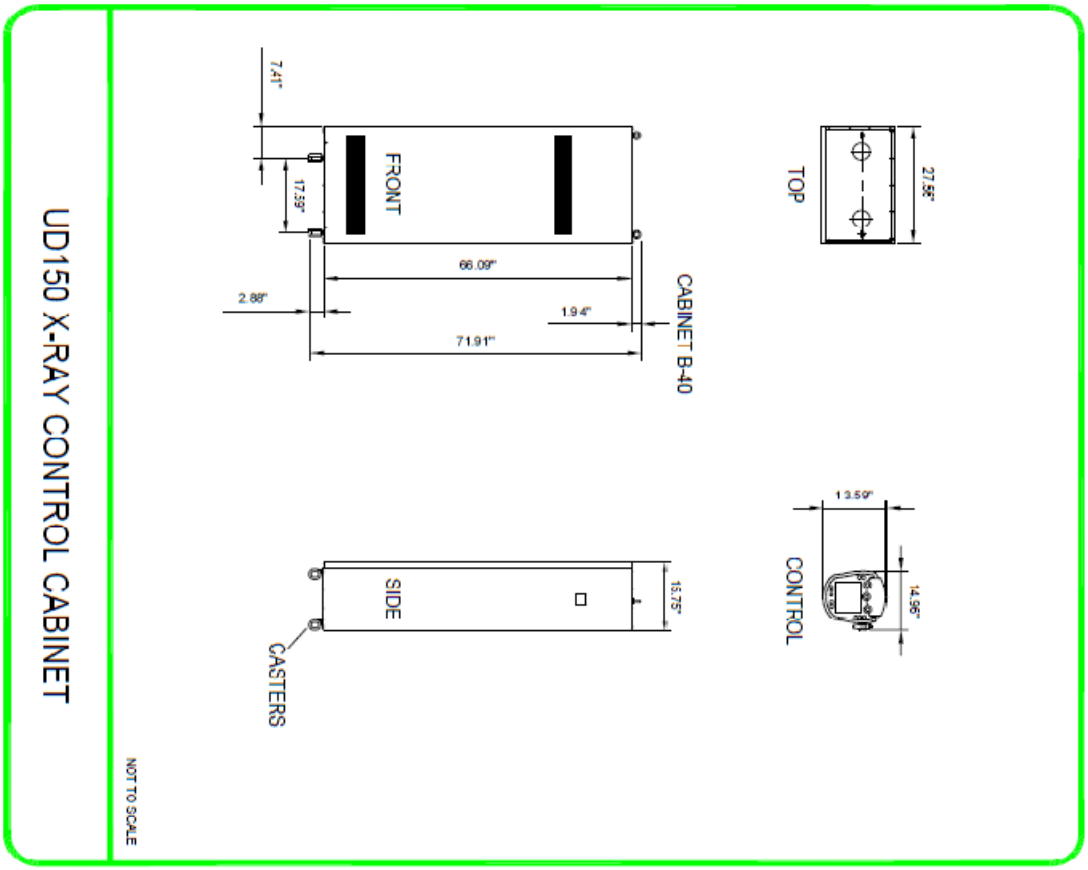

901 Montgomery Street
Decorah, IA 52101

PHONE 563-382-2911
FAX 563-387-3102

WinnMed

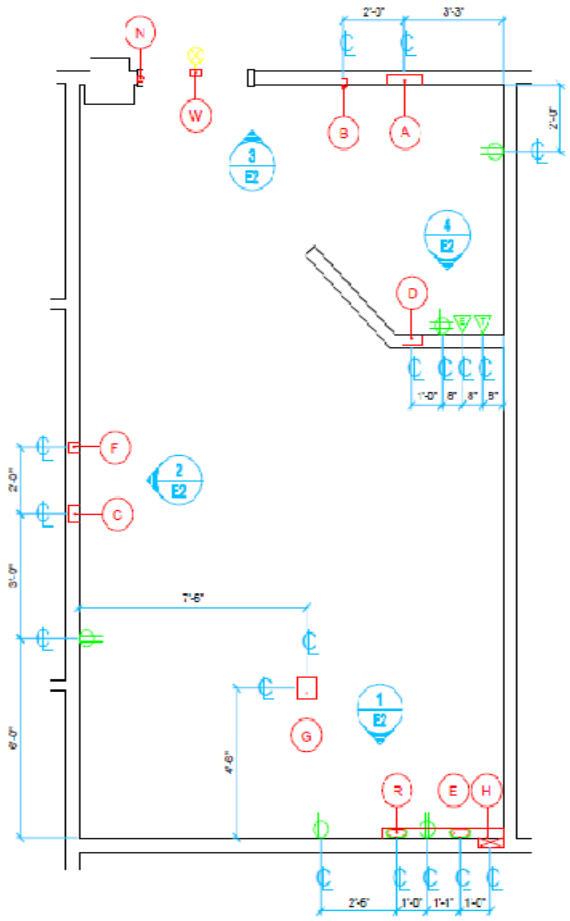

ELECTRICAL LAYOUT PLAN VIEW

TERMINAL SCHEDULE

(CONTRACTOR FURNISHED - CONTRACTOR INSTALLED)

ITEM	DESCRIPTION
A	FACILITY TO DETERMINE SOURCE LOCATION. NEMA 1, ENCLOSURE CONTAINING ONE 480VAC, THREE PHASE, FRONT OPERATED, 80AMP, 3-POLE THERMAL MAGNETIC CIRCUIT BREAKER WITH SHUNT TRIP DEVICE. FLUSH MOUNTED IN WALL WHERE SHOWN. LOCATE ENCLOSURE CENTER LINE 5'-6" A.F.F. NOTE: EC SHALL ENSURE THAT LUGS ARE LARGE ENOUGH TO FACILITATE OVERSIZED INCOMING CABLES REQUIRED BY X-RAY EQUIPMENT. REFER TO "INCOMING WIRE SIZE" NOTES
B	4" x 2" x 2 1/2" DEEP SWITCH BOX. FLUSH MOUNT IN WALL WHERE SHOWN. LOCATE BOX CENTER LINE AT 6'-0" A.F.F. EC SHALL PROVIDE ONE NO/NC SWITCH WITH RED MUSHROOM HEAD AND AN "EMERGENCY OFF" NAME PLATE. SWITCH TO BE USED ON SHUT TRIP DEVICE LOCATED ON MAIN CIRCUIT BREAKER <A>.
C	6" x 5" x 4" DEEP JUNCTION BOX. FLUSH MOUNT IN WALL WHERE SHOWN, LOCATE BOX CENTER LINE AT 38" A.F.F. PROVIDE COVER PLATE AS SHOWN IN COVER PLATE DETAILS. CABLE ACCESS FOR THE WALL STAND.
D	6" x 5" x 4" DEEP JUNCTION BOX. FLUSH MOUNT IN WALL WHERE SHOWN, LOCATE BOX CENTER LINE AT 12" A.F.F. PROVIDE COVER PLATE AS SHOWN IN COVER PLATE DETAILS. CABLE ACCESS FOR THE X-RAY CONTROL.
E	8" x 3" WIDE GROMMETED CABLE ACCESS HOLE IN BOTTOM OF WIRE TROUGH. LOCATE WHERE SHOWN. REFER TO TYPICAL WALL TROUGH OPENINGS. CABLE ACCESS FOR THE X-RAY GENERATOR CABINET.
F	4" x 4" x 4" DEEP JUNCTION BOX. FLUSH MOUNT IN WALL WHERE SHOWN, LOCATE BOX CENTER LINE AT 84" A.F.F. PROVIDE A BLANK OVER SIZE COVER PLATE. BOX OPENS OUT TO PROCEDURE ROOM NOT INTO CONTROL. CABLE ACCESS FOR THE WAP.
G	8" x 8" x 4" DEEP JUNCTION BOX. FLUSH MOUNT IN FLOOR WHERE SHOWN. PROVIDE A BLANK LIQUID TIGHT COVERPLATE. NOTE: A 2 1/2" CONDUIT STUBBED UP 1" ABOVE FLOOR CAN REPLACE JUNCTION BOX <G> AT CUSTOMERS DISCRETION. CABLE ACCESS FOR THE TABLE.
H	8" x 3" WIDE GROMMETED CABLE ACCESS HOLE IN REMOVABLE SPLIT COVERPLATE. LOCATE CENTER LINE 6" BELOW FINISHED CEILING. PROVIDE A COVER PLATE AS SHOWN ON TYPICAL TROUGH ELEVATION. ENSURE THE WIRE TROUGH DIVIDERS ARE NOT BEHIND ACCESS HOLE. CABLE ACCESS FOR THE CH-200 CABLES.
N	PROVIDE ONE 1-POLE, SINGLE THROW, MOMENTARY, EXPOSURE INTERLOCK SWITCH IN DOOR FRAME. SWITCH SHALL HAVE NORMALLY OPEN CONTACTS RATED AT 120VAC, 15AMPS. SWITCH SHOULD OPEN CONTACTS WHEN DOOR IS OPEN. (INSTALL ONLY IF REQUIRED BY PREVAILING CODE OR REQUESTED BY CUSTOMER).
R	8" x 3" WIDE GROMMETED CABLE ACCESS HOLE IN BOTTOM OF WIRE TROUGH. LOCATE WHERE SHOWN. REFER TO TYPICAL WALL TROUGH OPENINGS. CABLE ACCESS FOR THE SK-200 AND CH-200 ELECTRONICS CABINETS.
W	4" x 4" x 2" JUNCTION BOX FOR THE "X-RAY IN USE" WARNING SIGN. FLUSH MOUNT IN WALL OR CEILING. EXACT LOCATION TO BE DETERMINED BY THE FACILITY. THE X-RAY ON WARNING LAMP CIRCUIT SHALL BE COORDINATED BETWEEN THE THE FACILITY, THE CONSTRUCTION PARTICIPANTS AND THE EQUIPMENT INSTALLERS. REFER TO WIRING DIAGRAM.

PHONE 563-382-2911
FAX 563-387-3102

901 Montgomery Street
Decorah, IA 52101

WinnMed

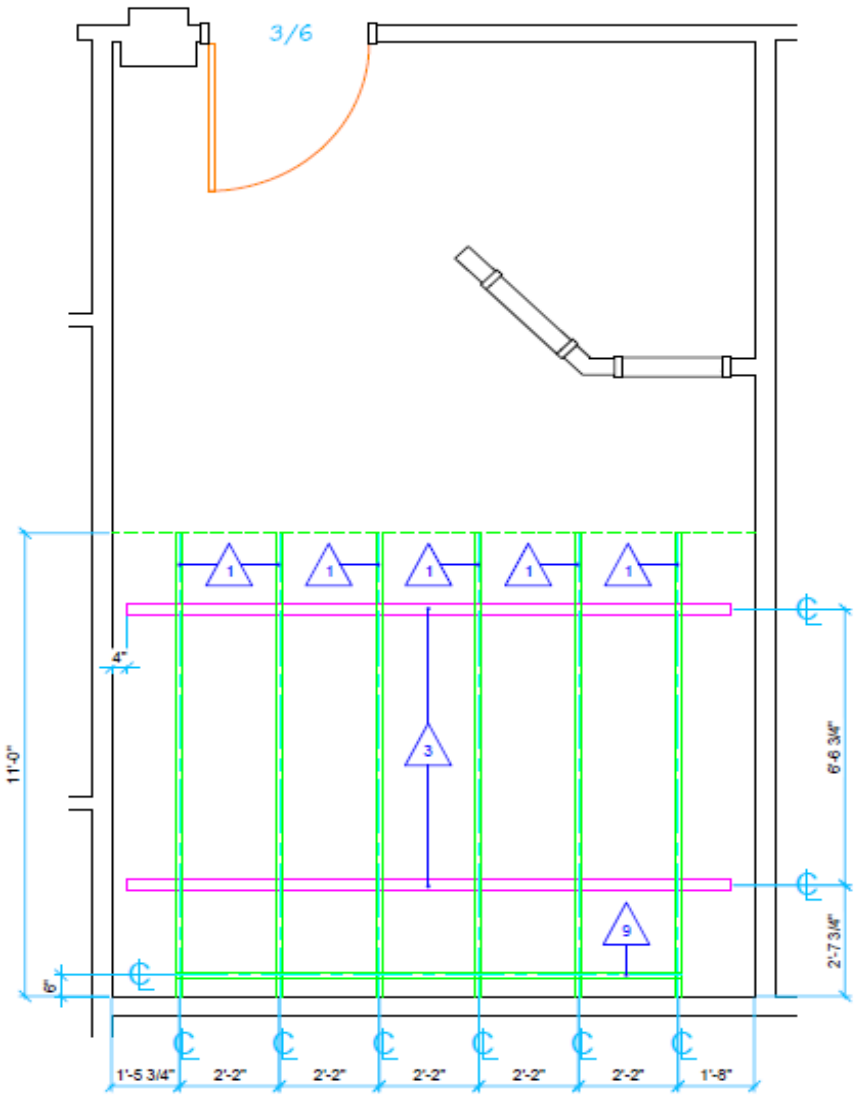

PROPOSED UNISTRUT LAYOUT

REQUIRED FINISHED CEILING HEIGHT IS 9'-2"

901 Montgomery Street
Decorah, IA 52101

PHONE 563-382-2911
FAX 563-387-3102

SUPPORT NOTES

(CONTRACTOR FURNISHED - CONTRACTOR INSTALLED)

THE EQUIPMENT REPRESENTATIVE OR THEIR DESIGNER IS IN NO WAY RESPONSIBLE FOR THE SUPPORT STRUCTURE FOR ANY OVERHEAD CEILING MOUNTED EQUIPMENT / DEVICES OR WALL MOUNTED EQUIPMENT / DEVICES. THIS IS THE RESPONSIBILITY OF THE CONSTRUCTION PARTICIPANTS.

UNISTRUT:

1. ALL UNISTRUT (OR EQUIVALENT) , ALL STEEL WORK AND ALL OTHER PARTS NECESSARY TO SUPPORT CEILING MOUNTED TUBE HANGER OR OTHER CEILING SUSPENDED EQUIPMENT SHALL BE PROVIDED BY AND INSTALLED BY CONTRACTOR. CONSIDER INSTALLING UNISTRUT CHANNELS WALL TO WALL TO FACILITATE FUTURE EQUIPMENT. UNISTRUT CHANNEL SHALL BE PARALLEL, SQUARE AND IN SAME HORIZONTAL PLANE. THE SYSTEM IS TO BE CROSS BRACED VERTICALLY, HORIZONTALLY, AND DIAGONALLY TO ALLOW NO MOVEMENT AND A MAXIMUM OF 1/16" DEFLECTION. THE RECOMMENDED HEIGHT ABOVE THE FINISHED FLOOR TO THE BOTTOM TO THE UNISTRUT IS SPECIFIED ON THIS PLAN.

2. CONTRACTOR SHALL SUPPLY 30 (UNISTRUT PART NUMBER P1008) 3/8" SPRINGNUTS, 30 (5 GRADE HARDNESS, ZINC PLATED) 3/8" X 1-1/2"-16 SOCKET HEAD CAP SCREWS, 30 3/8" LOCK WASHERS AND 5 (P2751) TROLLEY ASSEMBLIES PER X-RAY ROOM.

3. CONTRACTOR SHALL SUPPLY CLOSURE STRIPS (P3184) FOR AREAS OF UNISTRUT EXPOSED AND WITHOUT MOUNTING UNITS. THE CLOSURE STRIPS SHALL BE INSTALLED AFTER THE OVERHEAD RAILS HAVE BEEN SECURED IN PLACE BY THE EQUIPMENT INSTALLERS.

4. METHODS OF SUPPORT FOR THE STEELWORK THAT WILL PERMIT ATTACHMENT TO STRUCTURAL STEEL OR THROUGH BOLTS IN CONCRETE CONSTRUCTION SHOULD BE FAVORED. DO NOT USE SCREW ANCHORS IN DIRECT TENSION.

5. DO NOT USE SCREWS TO FASTEN CEILING GRID TO UNISTRUT. AN ALTERNATE METHOD SUCH AS TACK, SPOT WELDING, ETC. SHOULD BE CONSIDERED.

6. ALL UNISTRUT MEMBERS HAVE BEEN COORDINATED WITH THE X-RAY EQUIPMENT. ANY DEVIATION FROM THIS PLAN MUST BE APPROVED BY SIGNATURE THROUGH THE EQUIPMENT REPRESENTATIVE.

7. IT IS STRONGLY RECOMMENDED THAT A STRUCTURAL ENGINEER, IN CONJUNCTION WITH UNISTRUT REPRESENTATIVES, COORDINATE ANY UNISTRUT SUPPORT STRUCTURE.

SUPPORTS:

1. ALL UNITS THAT ARE WALL MOUNTED OR CEILING SUSPENDED ARE TO BE PROVIDED WITH SUPPORTS STRUCTURES WHERE NECESSARY.

2. ALL SUPPORTS STRUCTURES ARE TO BE PROVIDED BY THE FACILITY OR THEIR CONTRACTOR.

3. WALL SUPPORTS ARE TO BE HIDDEN WITHIN WALLS WHENEVER POSSIBLE.

4. WALL SUPPORTS MAY NOT BE REQUIRED IF WALL MATERIAL IS ADEQUATE FOR THE LOADS GIVEN (I.e.,BLOCK). CONSULTATION WITH A STRUCTURAL ENGINEER IS STRONGLY RECOMMENDED.

5. ALL SURFACE MOUNTED SUPPORTS ARE TO BE PAINTED THE SAME COLOR AS THE ADJACENT SURFACE OR CONSULT WITH FACILITY REGARDING ACCENT COLORS.

901 Montgomery Street
Decorah, IA 52101

PHONE 563-382-2911
FAX 563-387-3102

WinnMed

WinnMed **Issue Date:** **3/6/2024**
Expansion and Renovation
Decorah, IA 52101
Furniture Specifications

CONTACT: Ben Stevens - CFO
PHONE NUMBER: 563-387-3109

ITEM NUMBER:	16

ITEM NAME:	Ceiling Mount LED Exam Light		
ROOM NUMBER:		**QUANTITY:**	

SPECIFICATION INFORMATION

MANUFACTURER: Stryker
MODEL #: CE-3863075
DIMENSIONS:
DESCRIPTION: 80,000 lux, 5 levels of intensity control, double arm; ceiling mount; soffit panel included; 8' ceiling height

FURNITURE & EQUIPMENT IMAGE

901 Montgomery Street
Decorah, IA 52101

PHONE 563-382-2911
FAX 563-387-3102

WinnMed

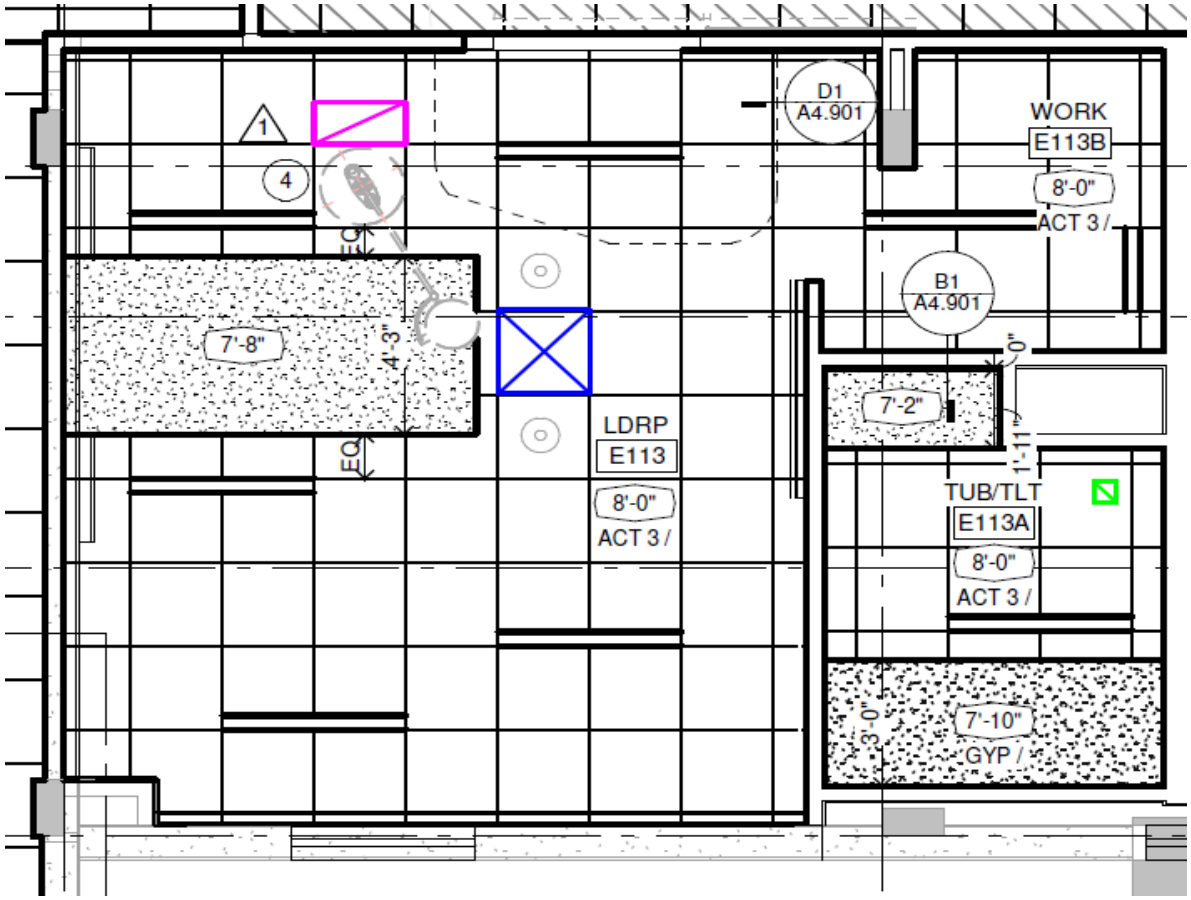

901 Montgomery Street
Decorah, IA 52101

PHONE 563-382-2911
FAX 563-387-3102

WinnMed

WinnMed **Issue Date:** **3/6/2024**
Expansion and Renovation
Decorah, IA 52101
Furniture Specifications

CONTACT: Ben Stevens - CFO
PHONE NUMBER: 563-387-3109

ITEM NUMBER:	17

ITEM NAME:	BLANK		
ROOM NUMBER:		**QUANTITY:**	

SPECIFICATION INFORMATION	

MANUFACTURER:
MODEL #:
DIMENSIONS:
DESCRIPTION:

FURNITURE & EQUIPMENT IMAGE

WinnMed

WinnMed **Issue Date:** **3/6/2024**
Expansion and Renovation
Decorah, IA 52101
Furniture Specifications

CONTACT: Ben Stevens - CFO
PHONE NUMBER: 563-387-3109

ITEM NUMBER:	18

ITEM NAME:	PreVac Single Sliding Sterilizer		
ROOM NUMBER:		**QUANTITY:**	

SPECIFICATION INFORMATION

MANUFACTURER: Steris
MODEL #: SR0101110311
DIMENSIONS: 16" x 16" x 26" Chamber Size
DESCRIPTION: Small Steam Sterilizer; 50 lbs tray capacity; 12 programmable cycles; vertical sliding door foot pedal activated; 30kW electric steam generator; 480V; single phase

FURNITURE & EQUIPMENT IMAGE

WinnMed

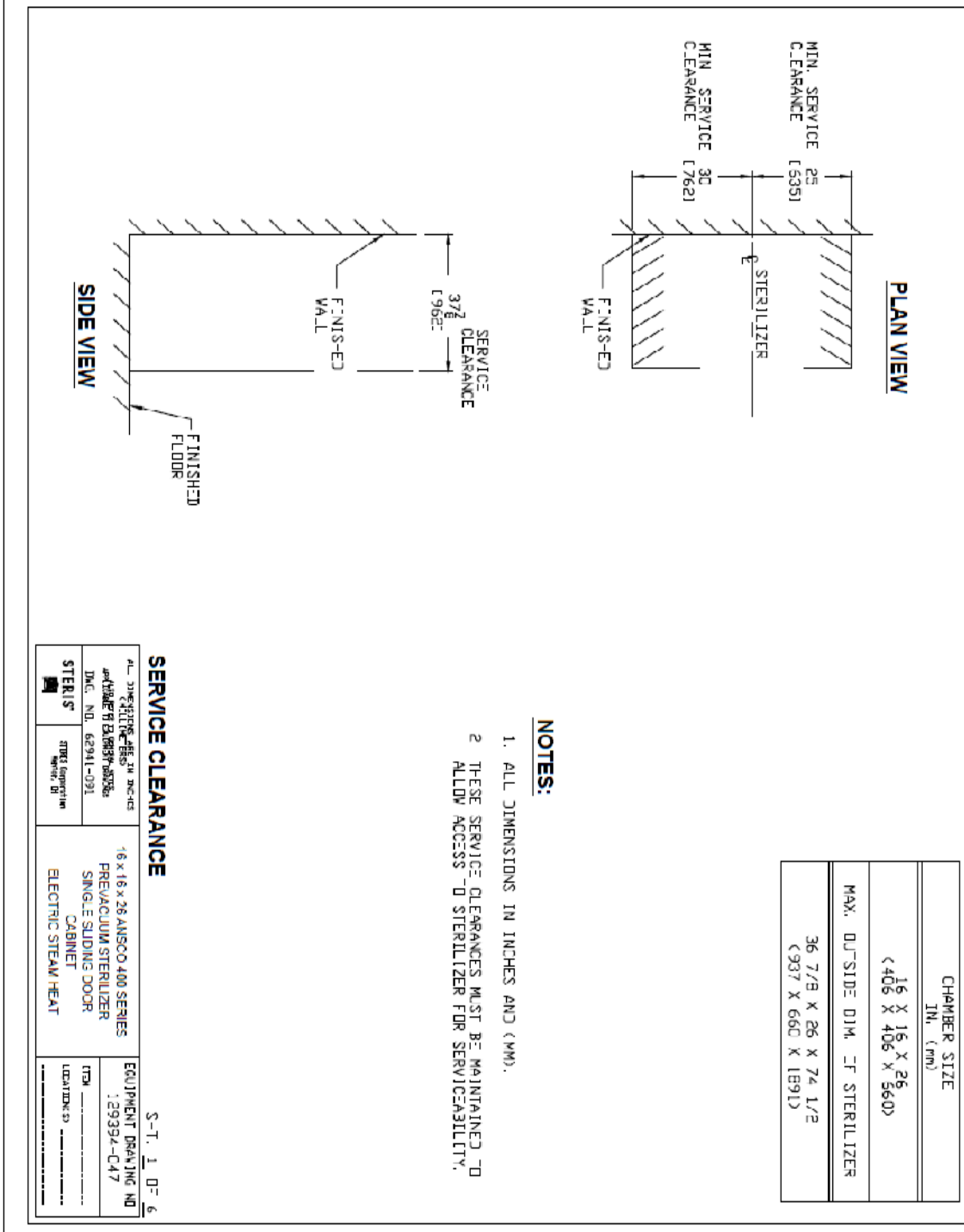

901 Montgomery Street
Decorah, IA 52101

PHONE 563-382-2911
FAX 563-387-3102

WinnMed

901 Montgomery Street
Decorah, IA 52101

PHONE 563-382-2911
FAX 563-387-3102

REV. AC

PLAN VIEW

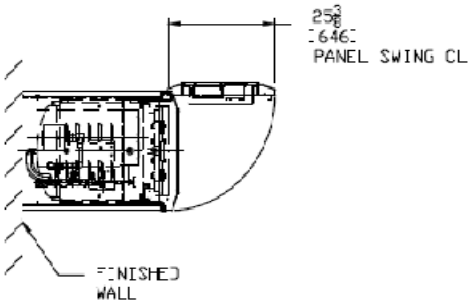

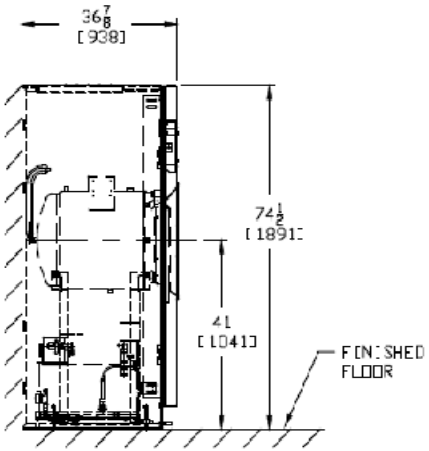

SIDE VIEW

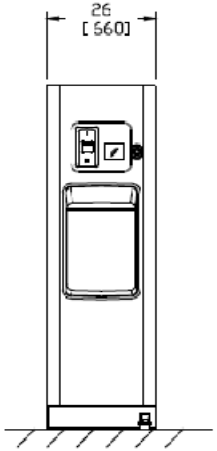

FRONT VIEW

GENERAL NOTES:

1. ALL DIMENSIONS IN INCHES AND (MM).
2. CURB WEIGHT:
   16 x 16 x 26 SD VESSEL = 870 LBS. (394 KG.)
3. MAXIMUM OPERATING WEIGHT BASED ON CHAMBER FULLY LOADED WITH WATER FLASKS:
   16 x 16 x 26 SD VESSEL = 890 LBS. (404 KG.)
4. FACILITY MUST PROVIDE REGULATED STEAM PRESSURE IN THE DYNAMIC RANGE SPECIFIED. FAILURE TO DO SO WILL RESULT IN IMPROPER EQUIPMENT OPERATION.
5. HEAT LOSS AT 70°F (21°C):
   16 x 16 x 26 - TO ROOM: 6050 BTU/HR (6,383 KILOJOULE)
6. LEVELING FEET ARE PROVIDED FOR PROPER INSTALLATION.
7. THE TIE-DOWN OF THIS STERILIZER HAS BEEN PRE-APPROVED IN CALIFORNIA (REF. OPA-0531). SEE STERIS DWG. NO. 83290-193 FOR SEISMIC LOADING AND TIE-DOWN SPECIFICATIONS.
8. FOR SEISMIC INSTALLATIONS: A SEISMIC ADD ON KIT (REF. 146660-182) MUST BE INSTALLED ON THE STERILIZER.
9. STERIS ASSUMES NO RESPONSIBILITY FOR CHANGES MADE NECESSARY THROUGH FAILURE TO OBSERVE THE SPECIFICATIONS ON EQUIPMENT DRAWING AND NOTE PAGES. SPECIFICATIONS AND DESCRIPTIONS ARE SUBJECT TO CHANGE WITHOUT NOTICE.

STERILIZER INSTALLATION

SHT. 2 OF 6

ALL DIMENSIONS ARE IN INCHES (MILLIMETERS) (UNLESS OTHERWISE NOTED) APPLICABLE TO EQUIPMENT DRAWINGS DWG. NO. 62941-091 STERIS / STERIS Corporation Mentor, OH	16 x 16 x 26 ANSCO 400 SERIES PREVACUUM STERILIZER SINGLE SLIDING DOOR CABINET ELECTRIC STEAM HEAT	EQUIPMENT DRAWING NO. 129394-047 ITEM LOCATIONS:

AUTOCAD DWG.

WinnMed

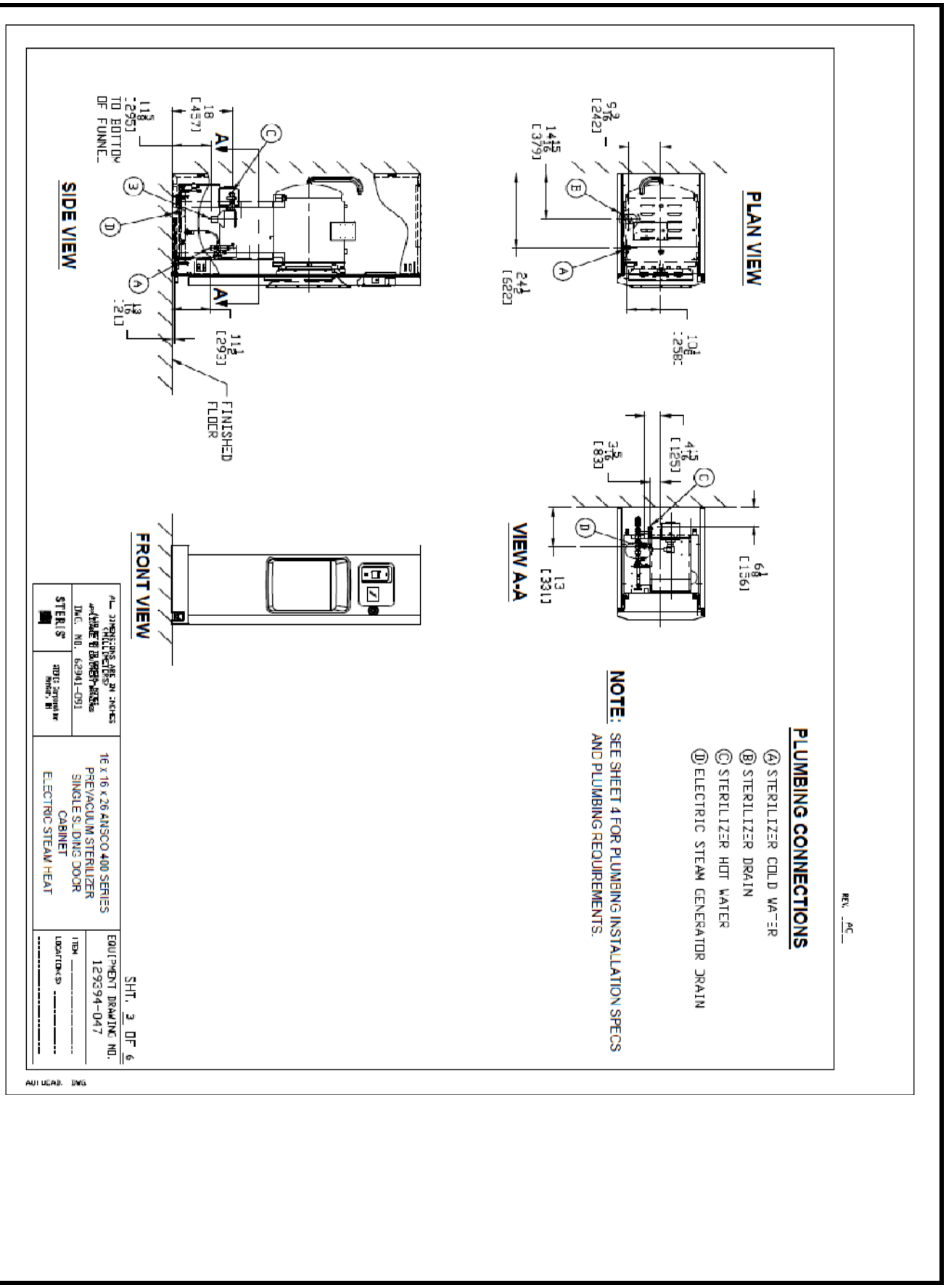

901 Montgomery Street
Decorah, IA 52101

PHONE 563-382-2911
FAX 563-387-3102

WinnMed

REV. AC

INSTALLATION SPECIFICATIONS:

THE INSTALLATION OF THE CHIMERON STERILIZER MUST MEET ALL APPLICABLE REGULATIONS.

INSTALLATION SPECIFICATION IS LISTED AS ENGINEERING AND INSTALLATION GUIDES. REFERENCED COMPONENTS AND SERVICE CONNECTIONS ARE NOT FURNISHED AS PART OF EQUIPMENT UNLESS UNDER WRITTEN AGREEMENT WITH STERIS.

1 PIPE SIZES LISTED UNDER **PLUMBING REQUIREMENTS** INDICATE THE EQUIPMENT TERMINATION SIZES ONLY. SIZE PIPING TO EQUIPMENT DEPENDING ON LENGTH OF PIPE RUN FROM PRESSURE REGULATING STATION FOR STEAM LINE, AND MAIN WATER HEADERS, TO SUPPLY THE SPECIFIED SERVICE PRESSURE AND FLOW RATE AT EQUIPMENT TERMINALS, INCLUDE EFFECT OF COINCIDENT DRAW OF MULTIPLE UNIT INSTALLATIONS.

2 PROVIDE PIPING, SHUT-OFF VALVE, PIPE PLUGGED TEE, AND UNION IN STEAM AND WATER SUPPLY CONNECTIONS BETWEEN EQUIPMENT AND STUB OUTS. PLUGGED TEE CAN LATER BE USED FOR TEST PRESSURE GAUGE CONNECTION. ARRANGE CONNECTION PIPING TO ALLOW ACCESS TO MACHINE COMPONENTS AND ELECTRICAL CONTROL PANEL.

3 RECOMMEND PROVISION OF BLOW DOWN VALVE AT EACH STEAM AND WATER STRAINER TO ENABLE STRAINER CLEAN OUT.

4 FOR RECOMMENDED FEED WATER QUALITY FOR STERILIZERS AND CARBON STEEL STEAM GENERATORS, SEE STERIS DWG. NO. 62941-091

5 BLOW DOWN BUILDING STEAM AND WATER SUPPLY LINES BEFORE FINAL CONNECTION TO EQUIPMENT

6 THE STERILIZER IS NOT SUPPLIED WITH A VACUUM BREAKER OR BACKFLOW PREVENTER AND WHERE REQUIRED BY LOCAL CODES, INSTALLATION OF SUCH A DEVICE IN WATER LINE IS BY OTHERS.

7 FOR GENERAL INSTALLATION INFORMATION SEE STERIS DRAWING NO. 62941-091 (THIS DWG SHOULD ALWAYS ACCOMPANY THE EQUIPMENT DWGS.) IF DWG. IS NOT ATTACHED, CONTACT STERIS SERVICE ENGINEERING AT 1-800-333-8848 TO OBTAIN A COPY

8. **PLACEMENT OF PIPING SHUTOFFS**: WHEN INSTALLING; SHUTOFFS MUST BE LOCATED IN A SUITABLE LOCATION WITHIN LINE OF SIGHT AND CLEAR OF ANY OBSTRUCTIONS THAT WOULD PUT THE SERVICE PERSON IN **HARMS WAY** IN ORDER TO SHUT IT OFF.

PLUMBING REQUIREMENTS

Ⓐ STERILIZER COLD WATER (SEE NOTE #4)

SUPPLY TEMPERATURE REQUIREMENTS ARE 50-70°F (10-21°C). VACUUM EFFICIENCY IS REDUCED AT WATER TEMPERATURES ABOVE 70°F (21°C).

1" NPT

30-50 PSIG DYNAMIC (2.1 TO 3.5 bar)

CONSUMPTION IN CYCLE

PEAK-15 gpm (57 lpm)

AVERAGE-135 gal/cycle (511 l/cycle)

CONSUMPTION OUT OF CYCLE

AVERAGE-12 gal/hr (.76 lpm)

SFPP CYCLES REQUIRE A MINIMUM OF 40 psig COLD WATER PRESSURE.

Ⓑ STERILIZER DRAIN:

1 1/2" ODT

(FLOOR DRAIN CAPACITY MUST HANDLE PEAK WATER CONSUMPTION).

Ⓒ STERILIZER HOT WATER: (SEE NOTE #4)

SUPPLY TEMPERATURE REQUIREMENTS ARE =< 140°F

WATER RESISTIVITY NOT TO EXCEED 26000 OHMS/CM.

1/2" NPT:

20-50 DYNAMIC PSIG (137.9-344.7 KPA)

CONSUMPTION: PEAK 1 GPM, PER CYCLE 3 GAL, IDLE 1 GPH.

Ⓓ DRAIN FROM ELECTRIC STEAM GENERATOR 1/2" ODT.

CHECK ALL NATIONAL CODES AND STANDARDS S-T 4 OF 6

ALL DIMENSIONS ARE IN INCHES (MILLIMETERS) DWG. NO. 62941-091	16 x 16 x 26 ANSCO 400 SERIES PREVACUUM STERILIZER SINGLE SLIDING DOOR CABINET ELECTRIC STEAM HEATT	EQUIPMENT DRAWING NO. 129394-047
STERIS	STERIS Corporation Mentor, OH	ITEM ____ LOCATION(S) ____

AUTOCAD. DWG.

PHONE 563-382-2911
FAX 563-387-3102

901 Montgomery Street
Decorah, IA 52101

WinnMed

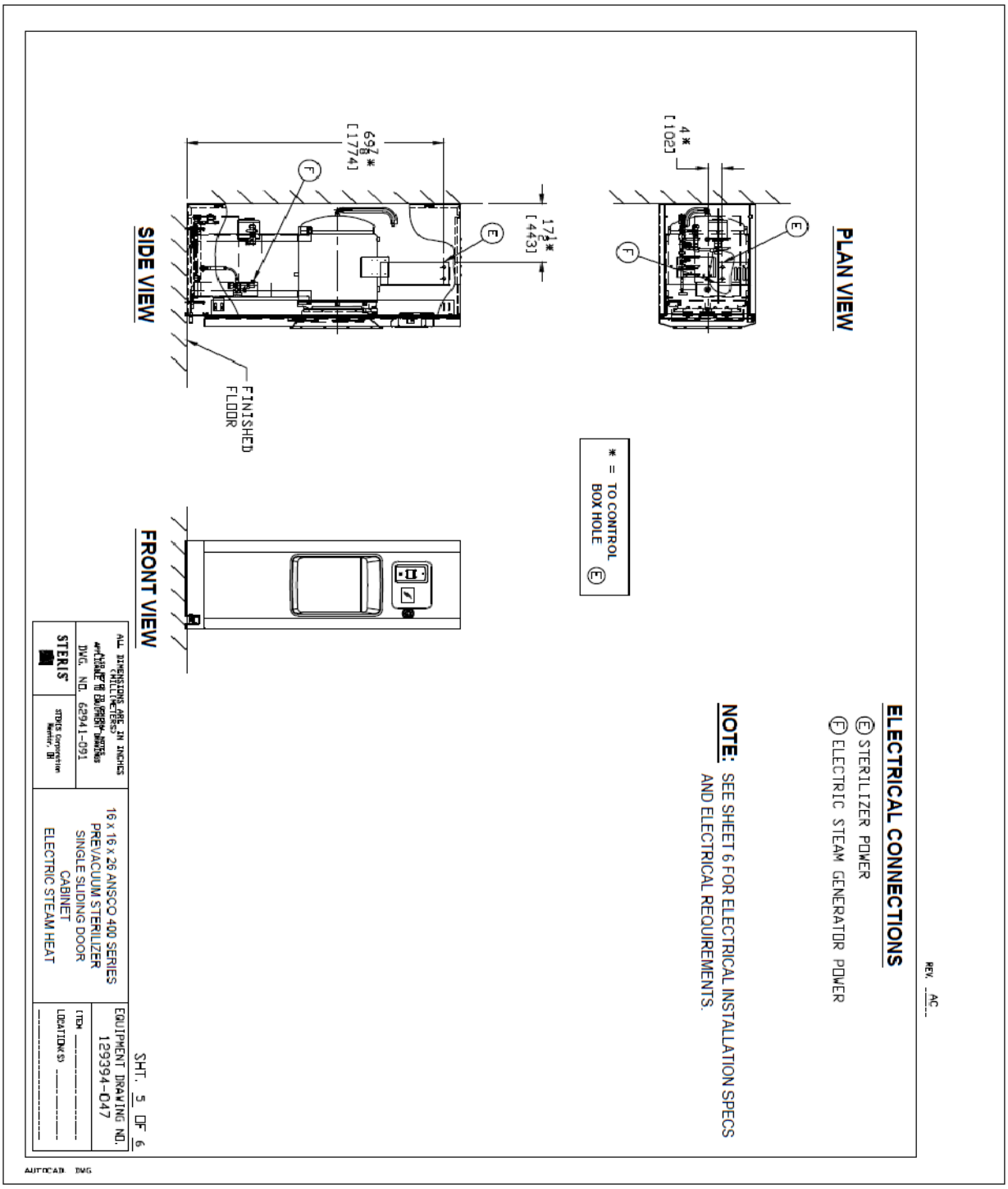

901 Montgomery Street
Decorah, IA 52101

PHONE 563-382-2911
FAX 563-387-3102

WinnMed

REV. AC

INSTALLATION SPECIFICATIONS:

THE INSTALLATION OF THE CHIMERON STERILIZER MUST MEET ALL APPLICABLE REGULATIONS.

INSTALLATION SPECIFICATION IS LISTED AS ENGINEERING AND INSTALLATION GUIDES. REFERENCED COMPONENTS AND SERVICE CONNECTIONS ARE NOT FURNISHED AS PART OF EQUIPMENT UNLESS UNDER WRITTEN AGREEMENT WITH STERIS.

1 PROVIDE GROUPED OR GANGED CIRCUIT PROTECTION AND DISCONNECT FOR STERILIZER POWER AS REQUIRED BY CODES AND STANDARDS. INDIVIDUAL POWER SHUTOFFS REQUIRED NEAR EACH MACHINE FOR SERVICING

2 PROVIDE GROUNDED METAL CONDUIT AND WIRING BETWEEN EQUIPMENT TERMINALS AND STUB OUTS OR DISCONNECTS. CHECK LOCAL CODES FOR MINIMUM AWG WIRE SIZE, #16 AWG. MINIMUM RECOMMENDED.

3 **PLACEMENT OF ELECT. DISCONNECTS**: WHEN INSTALLING DISCONNECTS MUST BE LOCATED IN A SUITABLE LOCATION WITHIN LINE OF SIGHT AND CLEAR OF ANY OBSTRUCTIONS THAT WOULD PUT THE SERVICE PERSON IN **HARMS WAY** IN ORDER TO SHUT IT OFF. ALSO, THE LOCATION OF THE DISCONNECTS SHOULD ALLOW THE SERVICE PERSON TO SHUTOFF POWER FROM THE SIDE TO PREVENT POSSIBLE ARC FLASH

4 **CAUTION**: DO NOT USE GROUND FAULT CURRENT INTERRUPTERS (GFCI).

5 **ATTENTION**: THE ELECTRICAL CLEARANCES REQUIRED BY THE NEC ARE THE RESPONSIBILITY OF THE INSTALLER. ALSO, ADHERENCE TO LOCAL CODES AND PROCUREMENT OF PERMITS ARE THE RESPONSIBILITY OF THE CUSTOMER UNLESS AGREED TO IN WRITING WITH **STERIS.**

6. FOR GENERAL INSTALLATION INFORMATION SEE STERIS DRAWING NO. 62941-091. (THIS DWG SHOULD ALWAYS ACCOMPANY THE EQUIPMENT DWGS.) IF DWG. IS NOT ATTACHED, CONTACT STERIS SERVICE ENGINEERING AT 1-800-333-8848 TO OBTAIN A COPY.

ELECTRICAL REQUIREMENTS

(E) STERILIZER POWER:

CONTROL BOX FOR 120V, 50/60 HZ, 9.5 AMP SINGLE PHASE SERVICE. MINIMUM RECOMMENDED LINE AND GROUND CONDUCTOR SIZE AWG #12 COPPER (2.05MM).

120VAC REQUIRE A THREE (3) WIRE CONNECTION (L1, NEUT, GND.).

MINIMUM 15A CIRCUIT BREAKER IS RECOMMENDED. INSTALLED NEAR THE EQUIPMENT WITHIN EASY REACH OF THE OPERATOR AND MARKED AS THE DISCONNECTING DEVICE FOR THE EQUIPMENT.

(F) ELECTRIC STEAM GENERATOR POWER:

30 KW HEATERS

208VAC, 50/60HZ, 83A, (3) PHASE. MINIMUM 90A CIRCUIT BREAKER RECOMMENDED. MINIMUM RECOMMENDED LINE CONDUCTOR SIZE AWG #3 COPPER (26.7 MM^2) 75°C (167°F) REQUIRES A FOUR (4) WIRE "DELTA" CONNECTION (L1, L2, L3, GND.).

240VAC, 50/60HZ, 72A, (3) PHASE. MINIMUM 80A CIRCUIT BREAKER RECOMMENDED. MINIMUM RECOMMENDED LINE CONDUCTOR SIZE AWG #4 COPPER (21.5 MM^2) 75°C (167°F) REQUIRES A FOUR (4) WIRE "DELTA" CONNECTION (L1, L2, L3, GND.).

480VAC, 50/60HZ, 36A, (3) PHASE. MINIMUM 45A CIRCUIT BREAKER RECOMMENDED. MINIMUM RECOMMENDED LINE CONDUCTOR SIZE AWG #8 COPPER (8.6 MM^2) 75°C (167°F). REQUIRES A FOUR (4) WIRE "DELTA" CONNECTION (L1, L2, L3, GND.).

380/415VAC, 50/60HZ, 38/42A, (3) PHASE. MIN 50A CIRCUIT BREAKER RECOMMENDED. MINIMUM RECOMMENDED LINE CONDUCTOR SIZE AWG #8 COPPER (8.6 MM^2) 75°C (167°F). REQUIRES A FOUR (4) WIRE "DELTA" CONNECTION (L1, L2, L3, GND.).

CHECK ALL NATIONAL CODES AND STANDARDS SHT 6 OF 6

ALL DIMENSIONS ARE IN INCHES (MILLIMETERS) ALL WORK TO COMPLY WITH APPLICABLE TO EQUIPMENT DRAWINGS DWG. NO 62941-091		16 x 16 x 26 ANSCO 400 SERIES PREVACUUM STERILIZER SINGLE SLIDING DOOR CABINET ELECTRIC STEAM HEAT	EQUIPMENT DRAWING NO 129394-047
STERIS	STERIS Corporation Mentor, OH		ITEM LOCATIONS:

AUTOCAD. DWG.

PHONE 563-382-2911
FAX 563-387-3102

901 Montgomery Street
Decorah, IA 52101

WinnMed

WinnMed **Issue Date:** **3/6/2024**
Expansion and Renovation
Decorah, IA 52101
Furniture Specifications

CONTACT: Ben Stevens - CFO
PHONE NUMBER: 563-387-3109

ITEM NUMBER:	19

ITEM NAME:	Triple Bay Reprocessing Sink		
ROOM NUMBER:		**QUANTITY:**	

SPECIFICATION INFORMATION

MANUFACTURER: Steris
MODEL #: SINK5097
DIMENSIONS: 97.5" W x 28 1/16" D x 33"-42" Working H
DESCRIPTION: 3 Basin adjustable height reprocessing sink; bay dimensions 30" w x 17" H x 10" D; (1) air pistol w/ tip attachment; (1) water pistol w/ tip attachment; (2) back splash-mounted pre-rinse/ faucet comb; (1) back splash-mounted treated water faucet and magnetic back splash; 120 V; 15A GFCI protected outlet requirement; Draws 3 amps; External Drain Lever Handles

FURNITURE & EQUIPMENT IMAGE

WinnMed

REVISION: F	ECN #: 106432	REVISION HISTORY	DEPICTS CHANGES FROM PRIOR REVISION

INDEX	DESCRIPTION OF CHANGE
1	SHEET 1- NOTE 2 ADDED MINIMUM. NOTE 4 CHANGED 300 TO 304
2	SHEET 3- CHANGED UTILITY REQUIREMENTS FROM 1/2" NPSM TO 3/8" COMPRESSION (2 PLACES)
3	SHEET 3- CHANGED UTILITY REQUIREMENTS FROM QUICK CONNECTOR FLEX COIL TO 3/8" COMPRESSION
4	SHEET 3- CHANGED UTILITY REQUIREMENTS FROM 1/2" NPSM WITH ...ADAPTER (INCLUDED)C TO 1/2" NPT
5	SHEET 3- CHANGED UTILITY REQUIREMENTS FROM 1/4" NPFT HOSE INCLUDED TO 1/4" NPT
6	SHEET 3- CHANGED NOTE 5 FROM "PREVENTED" TO "PREVENTION"
7	SHEET 4- CHANGED WALL AND FLOOR VIEW DRAIN DETAILS AND NOTES
8	SHEET 4- MOVED SEISMIC ANCHOR VIEW TO SHEET 6
9	SHEET 6- ADDED NOTE 2

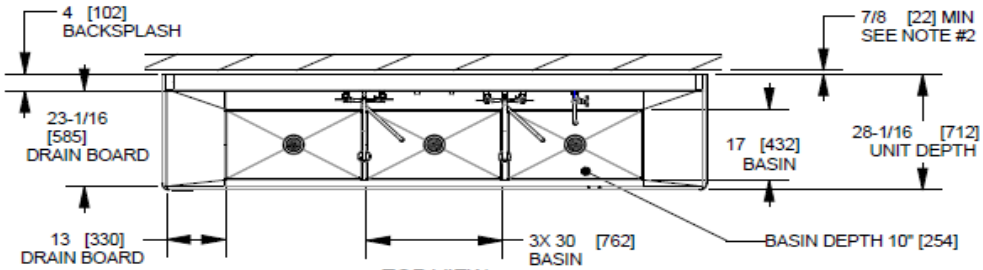

TOP VIEW

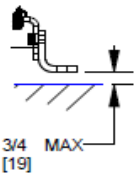

DETAIL A

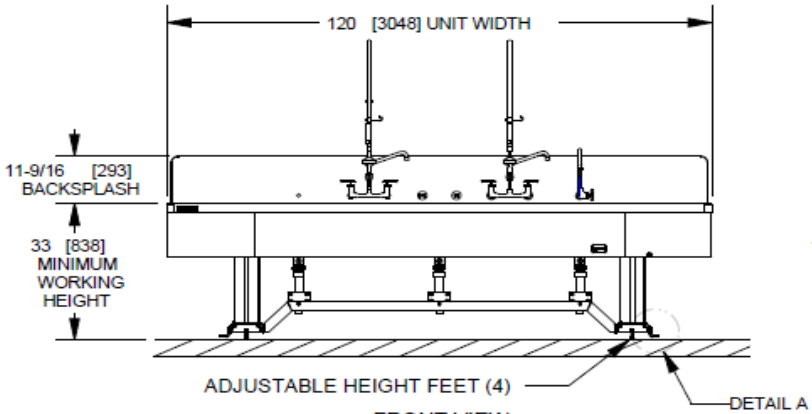

FRONT VIEW

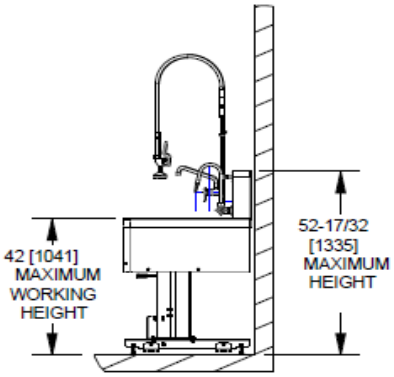

RIGHT SIDE VIEW
SHOWN AT
MAX HEIGHT

NOTES:
1. UNLESS OTHERWISE NOTED, ALL DIMENSIONS ARE IN INCHES [MM].
2. INSTALLER MUST MAINTAIN A MINIMUM GAP OF .875" TO ALL ADJACENT WALLS AS PINCH POINT PROTECTION. (F)
3. UNIT TO BE INSTALLED AGAINST A WALL, FOR BACK TO BACK INSTALLATION A PONY WALL IS REQUIRED.
4. 304 SERIES STAINLESS STEEL CONSTRUCTION. (F)
5. PONY WALL HEIGHT MUST BE 53"[1346].
6. WALL MUST BE FREE OF OBSTRUCTIONS TO 54"[1372].

STERIS Corporation

TITLE: 3 BASIN 120" ADJUSTABLE HEIGHT REPROCESSING SINK

SIZE:	SCALE:	DRAWN BY:	DRAWING NUMBER:	PART NUMBER:	REVISION:
A	1.000	Kosir, Joe	SINK50120 F.7	11002996	F

This document contains confidential and proprietary information of STERIS Corporation. Neither this document nor the information herein are to be reproduced, either in part or in whole, except as specifically authorized by STERIS Corporation.

SHEET 1 OF 6

901 Montgomery Street
Decorah, IA 52101

PHONE 563-382-2911
FAX 563-387-3102

WinnMed

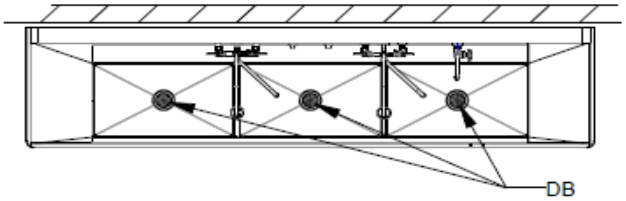

HW	HOT WATER
CW	COLD WATER
PW	PURE WATER
WG	WATER GUN
A	COMPRESSED AIR
DB	DRAIN BASKET (BASIN)
D	DRAIN

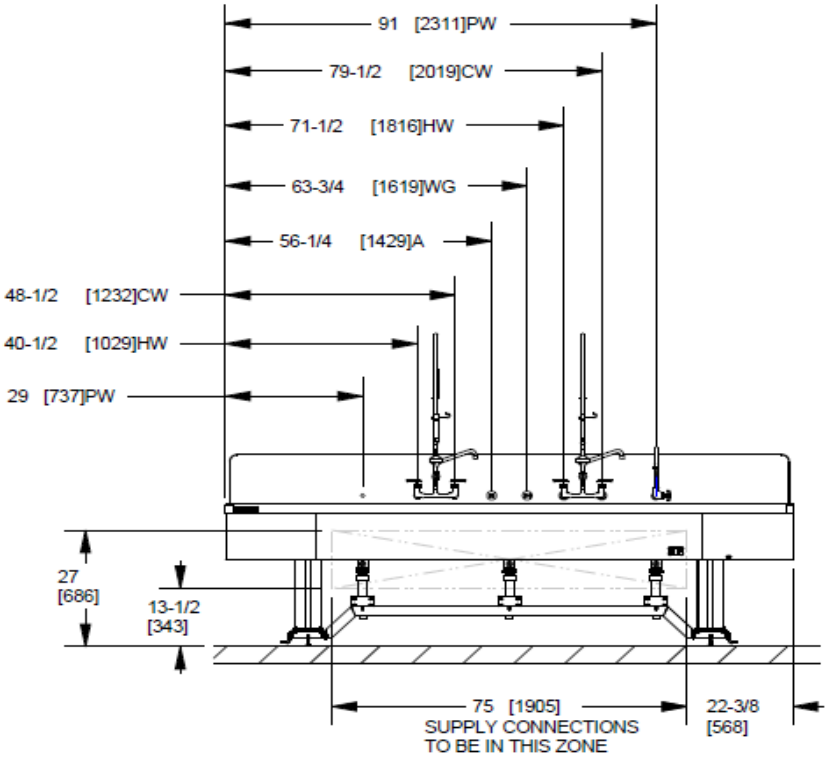

FRONT VIEW

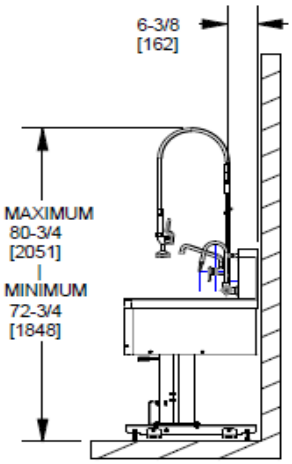

RIGHT SIDE VIEW
SHOWN AT
MAX HEIGHT

NOTE: WORKFLOW CAN BE REVERSED BY MOVING PURE WATER FAUCET
FROM RIGHT SIDE TO HOLE ON LEFT THAT IS CAPPED.
ADDITIONALLY THE COMPRESSED AIR AND WATER GUN FIXTURES SHOULD BE SWAPPED.

STERIS Corporation

TITLE: 3 BASIN 120" ADJUSTABLE HEIGHT REPROCESSING SINK

SIZE:	SCALE:	DRAWN BY:	DRAWING NUMBER:	PART NUMBER:	REVISION:
A	1.000	Kosir, Joe	SINK50120 F.7	11002996	F

This document contains confidential and proprietary information of STERIS Corporation. Neither this document nor the information herein are to be reproduced, either in part or in whole, except as specifically authorized by STERIS Corporation.

SHEET 2 OF 6

901 Montgomery Street
Decorah, IA 52101

PHONE 563-382-2911
FAX 563-387-3102

WinnMed

ADJ. HEIGHT PROCESSING TRIPLE SINK 120" X 28" X 33"-41"			
UTILITY REQUIREMENTS CHART (PLUMBING)			
UTILITY	PARAMETER	REQUIREMENT	NOTES
HOT WATER (HW)	CONNECTION TYPE/SIZE	3/8" COMPRESSION	F
	PRESSURE RANGE	15 TO 125 PSI	
	OPERATING FLOW RATE	1.6 GPM @ MAX PSI	
	TEMPERATURE RANGE	40° F TO 180° F	
	WATER QUALITY	SEE NOTE #2	F
COLD WATER (CW)	CONNECTION TYPE/SIZE	3/8" COMPRESSION	
	PRESSURE RANGE	15 TO 125 PSI	
	OPERATING FLOW RATE	1.6 GPM @ MAX PSI	
	TEMPERATURE RANGE	70° F MAX	
	WATER QUALITY	SEE NOTE #2	
PURE WATER (PW)	CONNECTION TYPE/SIZE	1/2" NPT	F
	PRESSURE RANGE	20 TO 125 PSI	
	OPERATING FLOW RATE	.25 TO 2.00 GPM ±15%	
	TEMPERATURE RANGE	40° F TO 140° F	
	WATER QUALITY		
WATER GUN (WG)	CONNECTION TYPE/SIZE	3/8" COMPRESSION	F
	PRESSURE RANGE	0 TO 44 PSI	
	OPERATING FLOW RATE		
	TEMPERATURE RANGE	40° F TO 125° F	F
	WATER QUALITY	SEE NOTE #2	
AIR GUN (A)	CONNECTION TYPE/SIZE	1/4" NPT	CONNECTION MUST BE MADE PER LOCAL CODE
	PRESSURE	30 PSI MAX	
	TIP 1	CONSUMPTION AT 30 PSI	2 SCFM
	TIP 2		
	TIP 3		
	TIP 4		
	TIP 5		
	TIPS 4 & 5 MUST BE OPERATED AT 30 PSI OR LESS TO COMPLY WITH OSHA DIRECTIVE		
BASIN DRAIN (BD)	CONNECTION TYPE	Ø 1-1/2" ABS P-TRAP (INCLUDED) Ø 2" COPPER P-TRAP (ACCESSORY)	DRAIN RATE AT 20 GPM EACH BASIN (ESTIMATED)

NOTES:
1. SUPPLY LINES FOR EACH CONNECTION ARE SHIPPED WITH EACH SINK.
2. STERIS RECOMMENDS THE FOLLOWING WATER QUALITY PARAMETERS:
   1. 100-200 PPM (500PPM MAX) TOTAL DISOLVED SOLIDS.
   2. 70-120 PPM (180PPM MAX) TOTAL ALKALINITY.
   3. 6.8-7.0PH (7.5 MAX).
   4. 0.1-0.5PPM (1.0PPM MAX) TOTAL SILICA.
3. STERIS DOES NOT SUPPLY A PRESSURE REGULATOR FOR USE WITH AIR GUN.
4. STERIS DOES NOT SUPPLY A PRESSURE REDUCING VALVE FOR USE WITH WATER GUN.
5. BACK FLOW PREVENTION BY CUSTOMER AGAINST BACK SIPHONAGE MAY BE REQUIRED (CHECK LOCAL PLUMBING CODE). (F)
6. FLOOR SINK OUTLET NEEDS TO BE ABLE TO ACCOMODATE WASTE FROM ALL BAYS (CHECK LOCAL PLUMBING CODE).
7. REFERENCES FOR PARAMETERS ARE TO MANUFACTURER'S RECOMMENDATION AND SHOULD BE FOLLOWED ACCORDINGLY.

STERIS Corporation

TITLE: 3 BASIN 120" ADJUSTABLE HEIGHT REPROCESSING SINK

SIZE:	SCALE:	DRAWN BY:	DRAWING NUMBER:	PART NUMBER:	REVISION:
A	1.000	Kosir, Joe	SINK50120 F.7	11002996	F

This document contains confidential and proprietary information of STERIS Corporation. Neither this document nor the information herein are to be reproduced, either in part or in whole, except as specifically authorized by STERIS Corporation.

SHEET 3 OF 6

901 Montgomery Street
Decorah, IA 52101

PHONE 563-382-2911
FAX 563-387-3102

WinnMed

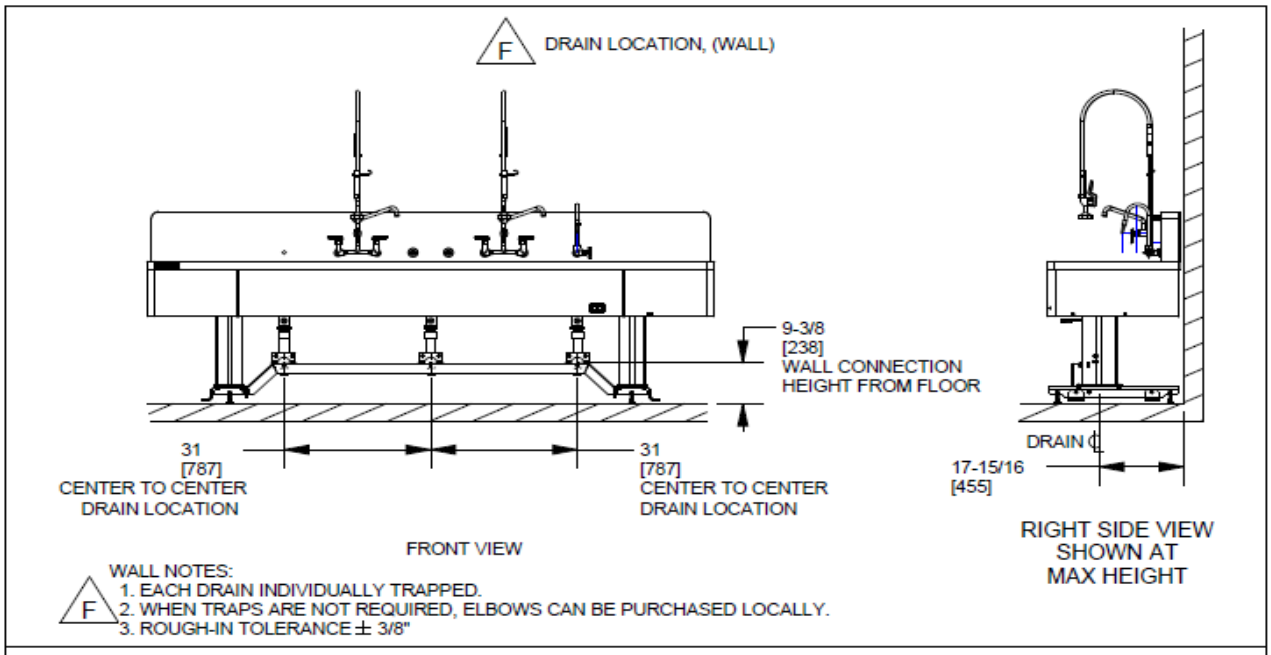

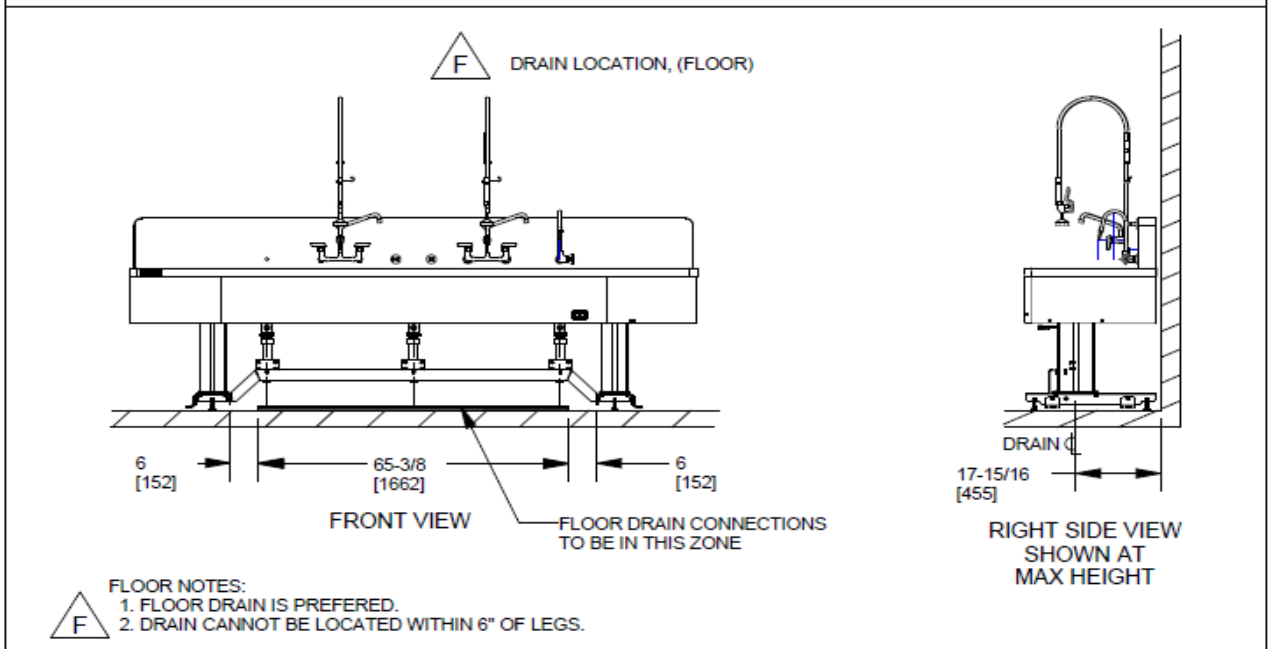

STERIS Corporation

TITLE: 3 BASIN 120" ADJUSTABLE HEIGHT REPROCESSING SINK

SIZE:	SCALE:	DRAWN BY:	DRAWING NUMBER:	PART NUMBER:	REVISION:
A	1.000	Kosir, Joe	SINK50120 F.7	11002996	F

This document contains confidential and proprietary information of STERIS Corporation. Neither this document nor the information herein are to be reproduced, either in part or in whole, except as specifically authorized by STERIS Corporation.

SHEET 4 OF 6

901 Montgomery Street
Decorah, IA 52101

PHONE 563-382-2911
FAX 563-387-3102

WinnMed

UTILITY (ELECTRICITY)
CONNECTION POSITION
RECOMMENDED

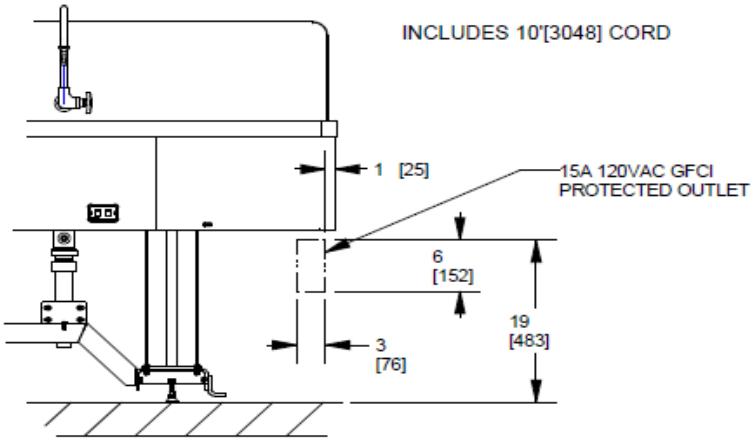

PARTIAL FRONT VIEW

ADJ. HEIGHT REPROCESSING TRIPLE SINK 120" X 28" X 33" TO 41"			
UTILITY SPECIFICATIONS CHART (ELECTRICAL)			
ELECTRICITY			
UTILITY	PARAMETER	REQUIREMENT	NOTES
ELECTRICITY	120V	15A GFCI PROTECTED OUTLET	
LINAK DL2 LIFT SYSTEM			
LINAK DL2 LIFT SYSTEM	WEIGHT CAPACITY	562LBS [2500 N] EACH	
	ADJUSTMENT RANGE	8.0" [203,2]	
	LIFT SPEED	UP TO 3/8"[10] PER SECOND	
	VOLTAGE	120VAC, 3A	WITH OVERLOAD PROTECTION

STERIS Corporation

TITLE: 3 BASIN 120" ADJUSTABLE HEIGHT REPROCESSING SINK

SIZE:	SCALE:	DRAWN BY:	DRAWING NUMBER:	PART NUMBER:	REVISION:
A	1.000	Kosir, Joe	SINK50120 F.7	11002996	F

This document contains confidential and proprietary information of STERIS Corporation. Neither this document nor the information herein are to be reproduced, either in part or in whole, except as specifically authorized by STERIS Corporation.

SHEET 5 OF 6

901 Montgomery Street
Decorah, IA 52101

PHONE 563-382-2911
FAX 563-387-3102

WinnMed

SEISMIC ANCHOR HOLE POSITIONS

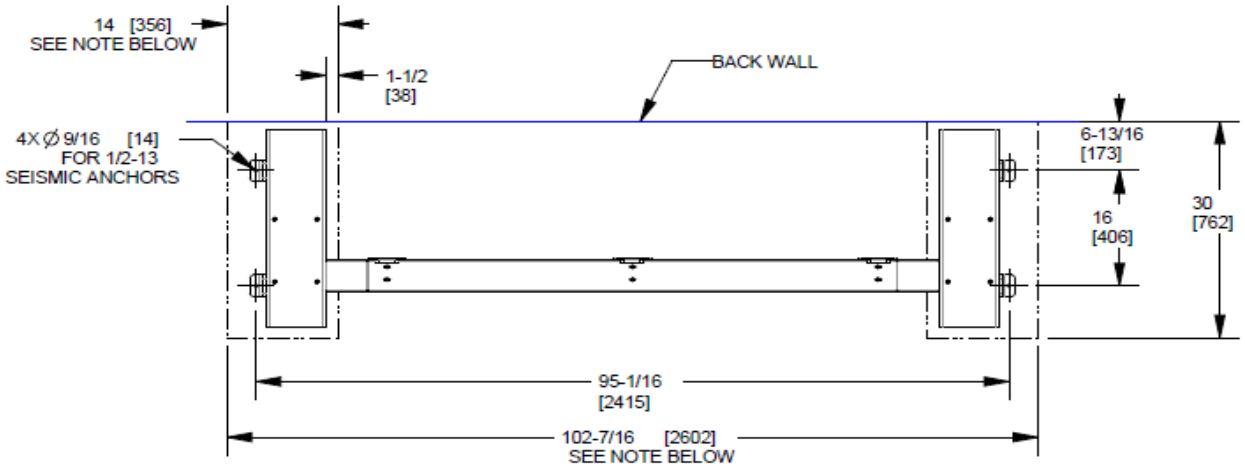

NOTE:
1. CONCRETE FLOOR MUST REMAIN FREE OF DEFECTS IN THESE AREAS FOR INSTALLATION OF SEISMIC ANCHORS (NOT PROVIDED BY STERIS).
2. REFER TO EQUIPMENT SPECIFIC SEISMIC DRAWING FOR MORE INFORMATION.

F

PHYSICAL SPECIFICATIONS	
SHIPPING DIMENSIONS L X W X H	132L X 36W X 48H
SHIPPING WEIGHT	690 LBS
OPERATING DIMENSIONS L X W X H	120" X 28" X 44-9/16" TO 52-9/16" [3048 X 711 X 1132 TO 1412]
OPERATING WEIGHT EMPTY	490 LBS
WORKING HEIGHT	33"[838] TO 41"[1041]

STERIS Corporation

TITLE: 3 BASIN 120" ADJUSTABLE HEIGHT REPROCESSING SINK

SIZE:	SCALE:	DRAWN BY:	DRAWING NUMBER:	PART NUMBER:	REVISION:
A	1.000	Kosir, Joe	SINK50120 F.7	11002996	F

This document contains confidential and proprietary information of STERIS Corporation. Neither this document nor the information herein are to be reproduced, either in part or in whole, except as specifically authorized by STERIS Corporation.

SHEET 6 OF 6

901 Montgomery Street
Decorah, IA 52101

PHONE 563-382-2911
FAX 563-387-3102

WinnMed

WinnMed **Issue Date:** **3/6/2024**
Expansion and Renovation
Decorah, IA 52101
Furniture Specifications

CONTACT: Ben Stevens - CFO
PHONE NUMBER: 563-387-3109

ITEM NUMBER:	20

ITEM NAME:	Pass-Through Endoscope Reprocessor		
ROOM NUMBER:		**QUANTITY:**	

SPECIFICATION INFORMATION

MANUFACTURER: Steris
MODEL #: ADVPT3008
DIMENSIONS: 51.8" W x 31.2" D x 78.75" H
DESCRIPTION: Automated Endoscope Reprocessor; Pass-Through; 120V; 30C No Air; 34-39 min cycle; dual basin system; touchscreen monitor; barcode scanner; foot switch for hands-free door opening/closing

FURNITURE & EQUIPMENT IMAGE

WinnMed

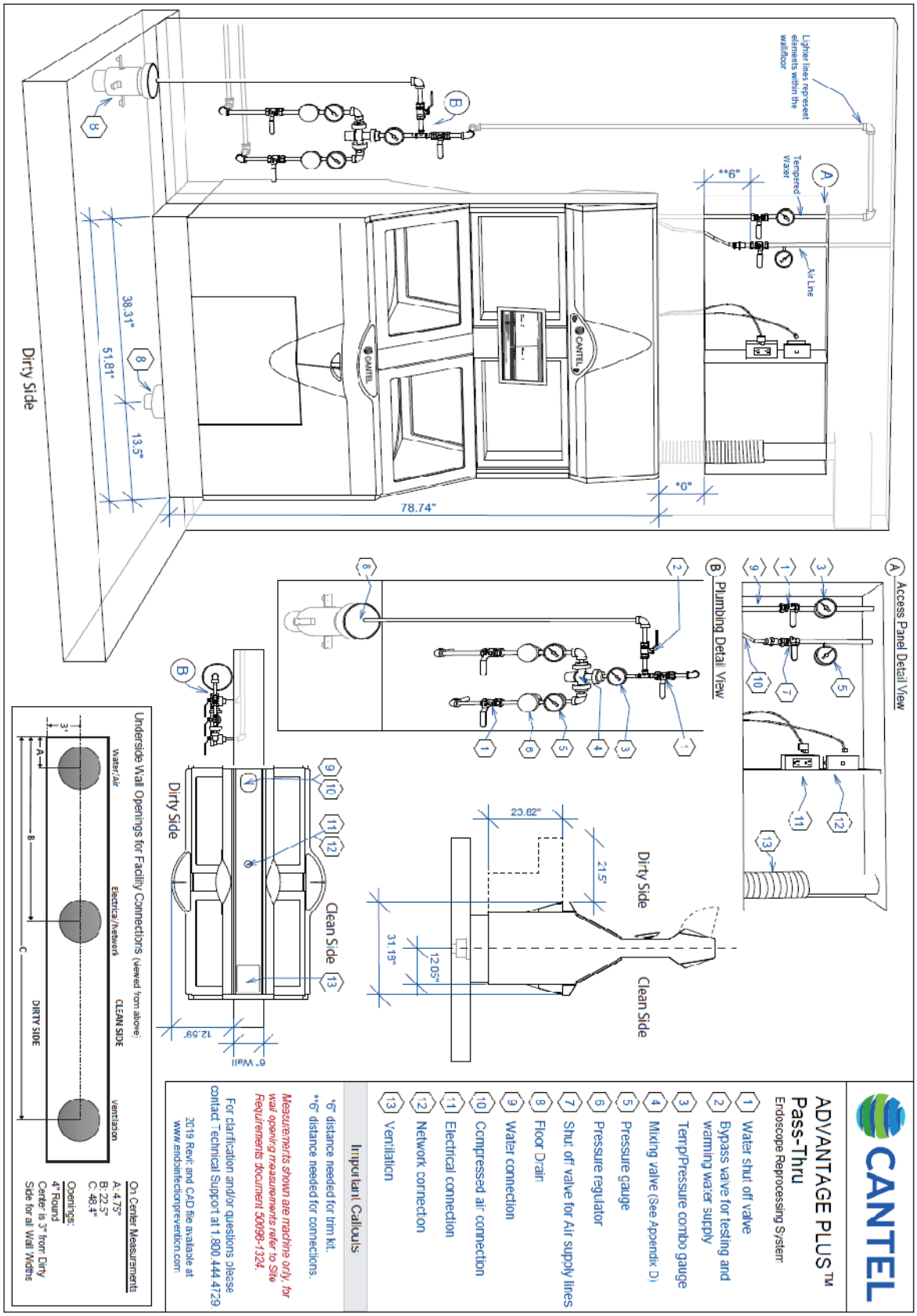

901 Montgomery Street
Decorah, IA 52101

PHONE 563-382-2911
FAX 563-387-3102

WinnMed

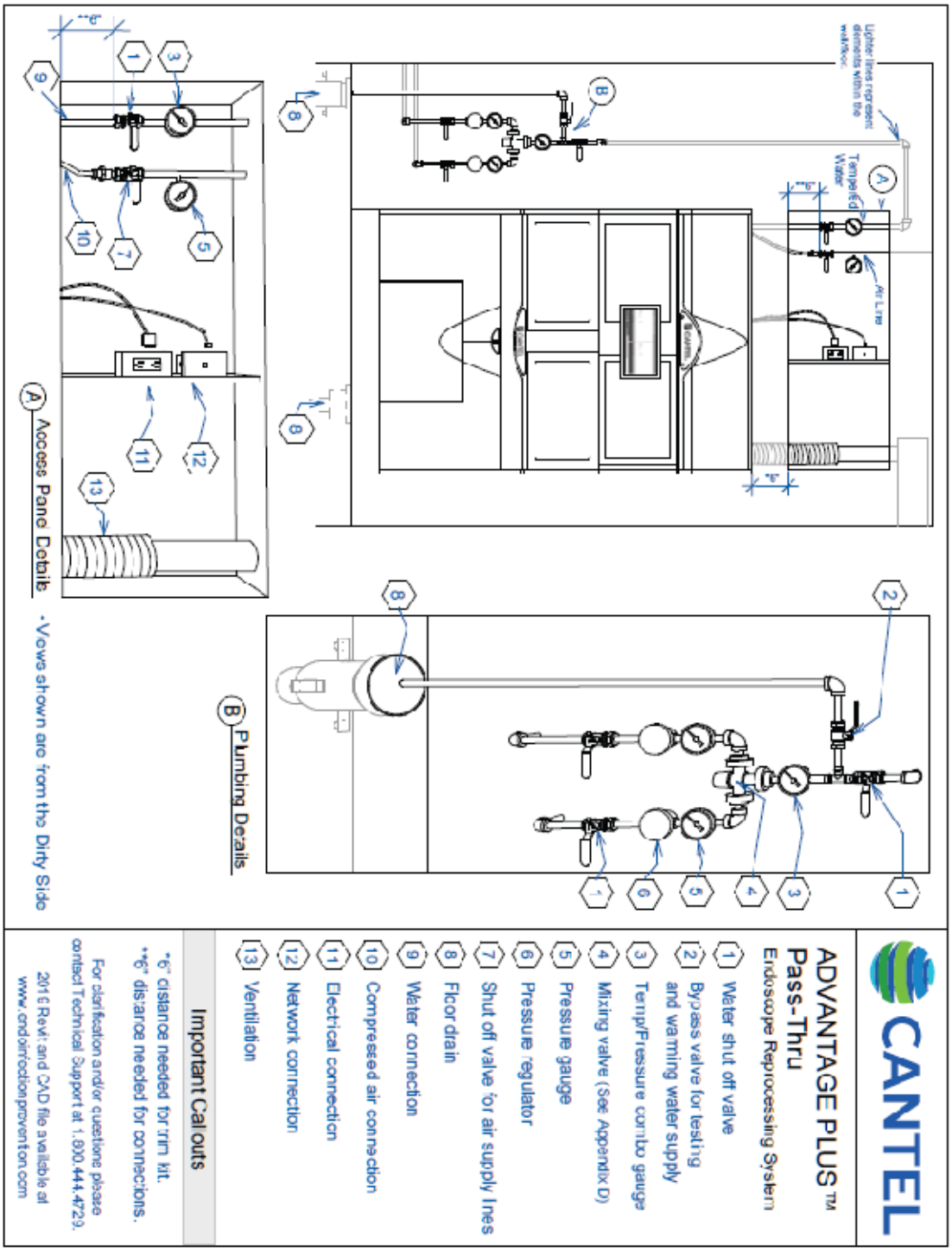

901 Montgomery Street
Decorah, IA 52101

PHONE 563-382-2911
FAX 563-387-3102

WALL PREPARATION

- Refer to the included installation diagram *(Appendix E and Appendix F)*.
- Wall rough opening:
  1. 1 reprocessor: 52-1/2" (1336 mm) wide x 79-3/4" (2025 mm) high
  2. 2 reprocessors: 104-1/4" (2646 mm) wide x 79-3/4" (2025 mm) high
  3. 3 reprocessors: 155-3/4" (3956 mm) wide x 79-3/4" (2025 mm) high
  4. 4 reprocessors: 207-1/2" (5266 mm) wide x 79-3/4" (2025 mm) high
- The wall opening must remain rough and consider the finished flooring. An optional trim kit is available to finish and seal the opening once the ADVANTAGE PLUS™ Pass-Thru Endoscope Reprocessor is installed. Medivators trim requires 4" (100 mm) of uninterrupted wall space on the sides and top of the reprocessor for trim attachment and is **the responsibility of the facility to install**.
- The interface between the wall opening and the floor must not have a cove or fillet, including wall space required for trim.
- Optimal **FINISHED** wall thickness is 4-1/2" (115 mm) to 7" (180 mm). Walls larger than 7" (180 mm) will require a custom trim kit be manufactured by the facility.
- The facility connections are made inside the wall. An access panel supplied by the facility will be required to provide access to these connections *(see Appendix F)*.
- Access panels must be placed on the dirty side.
- All facility connections must be accessible in the opening.

IMPORTANT: A minimum of 6" (153 mm) of space is required below the facility connections in the wall opening to allow for machine connections to be made.

- The facility connections must not be more than 3 feet (1000 mm) above the top of the ADVANTAGE PLUS Pass-Thru Endoscope Reprocessing System.
- The facility connections are divided into three groups:
  1. Water/Air
  2. Electrical/Networking
  3. Ventilation

Underside Wall Openings for Facility Connections (viewed from underneath)

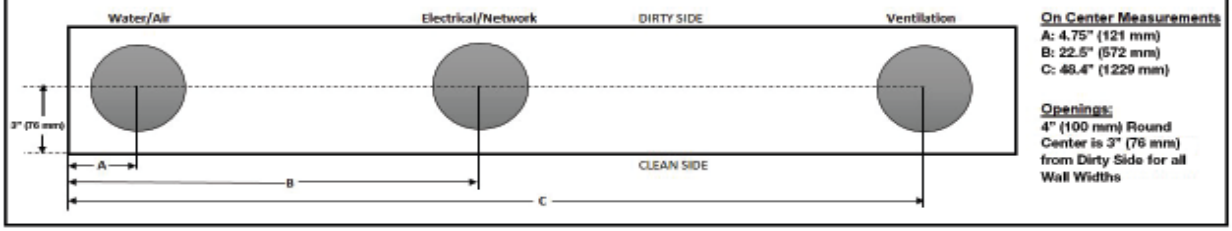

- Three access holes in the underside of the wall are required to make the connections between the facility and the ADVANTAGE PLUS Pass-Thru Endoscope Reprocessing System. Access holes need to be free of sharp edges. See above diagram for measurements.

FLOOR

- The floor must be level to allow for the proper leveling and sealing of the reprocessor.
- Do not slope the floor to the floor drains.

IMPORTANT: There can be no more than a ¼" (6 mm) in elevation variation across the floor underneath the Pass-Thru(s).

WATER SUPPLY (REFER TO APPENDIX E)

The water supply must be able to provide an on-demand water temperature of 95°F ± 4°F (35°C ± 2°C).

NOTE: It is the responsibility of the facility to meet the water supply requirements. It is also the facility's responsibility to install, maintain and troubleshoot the water supply system. Please consult a local certified plumber for your specific installation.

NOTE: The use of an on-demand water heater could be used if the system can meet the temperature and flow specifications similar to the thermostatic mixing valves. Colder climate locations should take into consideration worse case scenarios of water supply temperatures and flow when reviewing an on-demand option.

- De-ionized water (DI water), due to its corrosive nature, cannot be used in the ADVANTAGE PLUS™ Pass-Thru Reprocessor.
- Potable water is the **minimum standard**; RO water is preferred, but not required.
- It is the responsibility of the facility to filter the incoming water to 1 micron.
- If a mixing valve is used, then it must be a thermostatic mixing valve. **One mixing valve per reprocessor is REQUIRED.**
- The thermostatic mixing valve must be accessible to aid in adjustment.
- Post thermostatic mixing valve the facility must include a thermometer followed by a bypass valve to a drain.
- *Appendix D* includes a suggested list of thermostatic mixing valves.
- Cantel Medical **REQUIRES** the addition of pressure regulators, temperature and pressure gauges on each of the hot and cold-water supply lines prior to entering the thermostatic mixing valve. It is the responsibility of the facility to purchase, install and maintain these devices. Temperature and pressure gauges on the incoming water lines provide a means of monitoring the water system of the facility should water temperature issues arise. Consult a qualified plumber to assist in determining the proper regulators, temperature and pressure gauges to use.
- The incoming waterline must be a minimum of 1/2" (13 mm) ID providing a minimum flow rate of 2.6 GPM (10 l/min) (per machine) and a **DYNAMIC** water pressure between 40 to 87 PSI (3 to 6 bar) at the gauge before the Bypass Valve.
- Water consumption is approximately 8 gallons (30 Liters) per cycle for a standard endoscope disinfection cycle and 11.5 gallons (43 Liters) per cycle for an endoscope disinfection cycle with a detergent wash per machine. Water consumption for the ADVANTAGE PLUS™ Pass-Thru Endoscope Reprocessing System will vary depending on the incoming water temperatures. The reprocessor will extend the initial flush up to 15 minutes to allow the water to come up to temperature to meet the minimum required temperature of the disinfectant.
- Ensure water hardness is less than 200 ppm $CaCO_3$ (200 mg/L $CaCO_3$) for optimal performance.

NOTE: An emergency eye wash valve **WILL NOT** meet the water temperature specifications for the ADVANTAGE PLUS™ Pass-Thru Endoscope Reprocessor and should not be used.

NOTE: After the mixing valve, a bypass valve with a path to a drain separate from the main machine drain with a shutoff valve **MUST** be installed so the operator can run water through the mixing valve if the water temperature falls too low and needs to be brought to temperature.

NOTE: Mixing Valve should be located within **4 FEET** (1220 mm) of the reprocessor and be easily accessible to operators for adjustments.

NOTE: The ADVANTAGE PLUS™ Pass-Thru Endoscope Reprocessor does not require backflow protection for the incoming water supply, nor is a backflow protection device installed in the reprocessor. Please consult your local codes, standards and/or guidelines, for applicable requirements. Some backflow protection devices may require their own additional drain. The customer is responsible for meeting local requirements.

DRAIN (REFER TO APPENDIX F)

- The drain must be in the floor in the location indicated in the installation diagram.
- The drain system must accommodate draining of 10.5 gal/min (40 l/min).
- Facility must supply a flush floor drain with a minimum diameter of 4" (100 mm).

WARNING: An open trench drain CANNOT be used as the drain system for the ADVANTAGE PLUS™ Pass-Thru Endoscope Reprocessor.

AIR SUPPLY

- Facility must supply a 1/4" (6 mm) NPT female connection with a shutoff valve and pressure gauge located in the wall behind an access panel.
- The facility supplied compressed air must meet these requirements:
  - 58 to 145 psi (4 to 10 bar)
  - The maximum demand of compressed air is 1.1 scfm (32 l/min ANR)
  - Filtered to 5 microns
- The maximum dew point is 45°F (7°C).
- The maximum oil concentration is 5 mg/m3.

ELECTRICAL SUPPLY

- 120 VAC ± 10%, single phase, 60 Hz, 1200 watts per unit
- Facility must supply a GFI protected NEMA 5-15R outlet located in the wall behind an access panel per unit.
- Power consumption: 180 watts at idle, 480 watts during a cycle in one basin, 720 watts during a cycle in both basins, and a nominal peak of 1200 watts per unit.

HEAT LOAD

- Idle: 600 BTU/hr.
- Cycle (1 basin): 1600 BTU/hr.
- Cycle (2 basins): 2400 BTU/hr.

VENTILATION

NOTE: It is the facility's responsibility to ensure ventilation requirements are met. Ventilation requirements are determined by OSHA based on the chemical being used for disinfection.

- It is a health and safety requirement to have a minimum of 10 air changes per hour in the room.
- Facility must supply a 4" (100 mm) round duct connection located in the wall behind an access panel.
  - A minimum of 25 cfm (12 l/s) at 0.25 inches (6 mm)-water (62 PA) static pressure is required to properly vent the ADVANTAGE PLUS™ Pass-Thru Endoscope Reprocessing System.

NETWORK

- Facility is required to supply an RJ45 network connection receptacle located in the wall behind an access panel.
- The ADVANTAGE PLUS Pass-Thru Endoscope Reprocessing System is equipped with a PC running Windows 7 which will allow full networking along with the capability of remote diagnostics.

DIMENSIONS

- Shipping Dimensions
  - Crate Dimensions: 85.5" (2172 mm) H x 69.5" (1766 mm) W x 44" (1118 mm) D
  - Crate Weight: 1100 lbs (499 kgs)
- Reprocessor Dimensions
  - The physical dimensions are 51-1/2" (1306 mm) Wide x 78-3/4" (2000 mm) High x 31-1/4" (792 mm) Deep.
  - The installed weight is 882 lbs (400 kgs).

WinnMed

WinnMed **Issue Date:** **3/6/2024**
Expansion and Renovation
Decorah, IA 52101
Furniture Specifications

CONTACT: Ben Stevens - CFO
PHONE NUMBER: 563-387-3109

ITEM NUMBER:	21

ITEM NAME:	Endoscope Drying and Storage System		
ROOM NUMBER:		**QUANTITY:**	

SPECIFICATION INFORMATION

MANUFACTURER: Steris
MODEL #: DRY1001
DIMENSIONS: 23.6" W x 21.3" D x 74.8" H
DESCRIPTION: Endoscopy Drying and Storage System; 1 hour interal dry time; 3 hour external dry time; single-sided w/ glass door;

FURNITURE & EQUIPMENT IMAGE

AIR SUPPLY

1. Quality: ISO 8573-1:2010 class 1.2.1
   - Particle Size: Incoming air filtered down to <1 micron in size.
   - Moisture Content: Pressure dew point (PDP) of -40°C or better required and no liquid water.
   - Oil Content: < 0.01mg of oil per cubic meter of compressed air (liquid, aerosol or vapor oil).
2. Pressure: The below pressures are required at the point of cabinet connection. Facility should consult with their Maintenance Department or their qualified air vendor to identify potential issues with the air supply.
   - ENDODRY™ Cabinet for ADVANTAGE PLUS™ Endoscope Reprocessor: 58-145 psi (4-10 bar).
   - ENDODRY Cabinet for DSD EDGE™ Automated Endoscope Reprocessor: 72-145 psi (5-10 bar).
3. Volume: The below volumes are required at the point of cabinet connection.
   - ADVANTAGE PLUS Endoscope Reprocessor/ENDODRY Cabinet: Minimum requirement of 4.2 scfm (120 l/min ANR) per cabinet.
   - DSD EDGE Automated Endoscope Reprocessor/ENDODRY Cabinet: Minimum requirement of 7 scfm (200 l/min ANR) per cabinet.
4. Flexible Air Hose: A 5 foot (1.5 Meter) line is included with each cabinet.
   - One end will be pre-configured to connect to ENDODRY™ Drying Cabinet.
   - Open end will be ¼" or 6mm inner diameter and it is the responsibility of the facility to make that connection to their air supply line.

The compressors listed below are suggestions that the facility can purchase directly from either the compressor manufacturer or authorized dealer. Medivators is not responsible for air compressor warranty, service and maintenance.

ADVANTAGE HOOKUPS			DSD HOOKUPS		
# of Cabinets	**BeaconMedaes** *(Requires Additional Dryer)*	**Powerex** *(w/ Dryer)*	**# of Cabinets**	**BeaconMedaes** *(Requires Additional Dryer)*	**Powerex** *(w/ Dryer)*
1	LES03-145T-RD-xxx	SES0308TM**	1	LES05-145T-RD-xxx	SES0508TM**
2	LES05-145T-RD-xxx	SES05058TM**	2	LES10-145RD	LSE1504
3	LES07-145T-RD-xxx	LSE1504	3	LES15-145RD	LSE1504
4	LES07-145T-RD-xxx	LSE1504	4	LES20-145RD	LSE2005
5	LES15-145RD	LSE1504	5	LES20-145RD	LSE2005

ELECTRICAL SUPPLY

- 100-240 VAC ± 10%, single phase, 50/60 Hz, 15 amp circuit (120v), 10 amp circuit (230v).
- Power input: 75W
- A NEMA 5-15 power cord for the North America market and a CEE 7 power cord for the European market is included with the ENDODRY™ Storage and Drying System. The cord is approximately 6 feet (1.8 meters) in length.
- A GFI/RCD protected outlet located on the wall above the ENDODRY Storage and Drying System, see Floor & Wall Section.
- Medivators equipment must be on dedicated circuits.

NETWORKING

- The ENDODRY Storage and Drying System is a networkable piece of equipment and has the capabilities to communicate to other Medivators technologies via a LAN interface (RJ45, 10/100 Mbit).
- A 6.5 foot (2 meter) cable is included with the cabinet.
- A RJ45 wall mounted network jack located on the wall above the ENDODRY Storage and Drying System, see Floor & Wall section.

DIMENSIONS

Shipping Dimensions

- Crate Dimensions: H84"x W47"x D31"
- Crate Weight: 583 lbs.

Reprocessor Dimensions

- Dimensions: H74.8" X W23.6" X D21.3"
- Weight: 375 lbs (170 kg)

FLOOR & WALL

- The floor must be level.
- For optimal user-safety and operation, it is recommended that the ENDODRY Storage and Drying System always be placed directly on the floor, and not on an elevated platform.
- The back of the one-sided ENDODRY Storage and Drying System will be placed flush against the wall. All electrical, network and air connections must be placed a minimum of 78.7 inches (200 cm) off of the floor above the cabinet.
- The two-sided ENDODRY Storage and Drying System is designed to fit into an opening in the wall. The rough opening for a single unit is H75.2" X W24" (191cm x 61cm). All electrical, network and air connections must be placed a minimum of 78.7 inches (200 cm) off of the floor above the cabinet. The electrical, network and air connections must be located on the loading side of the ENDODRY Storage and Drying System.

WinnMed

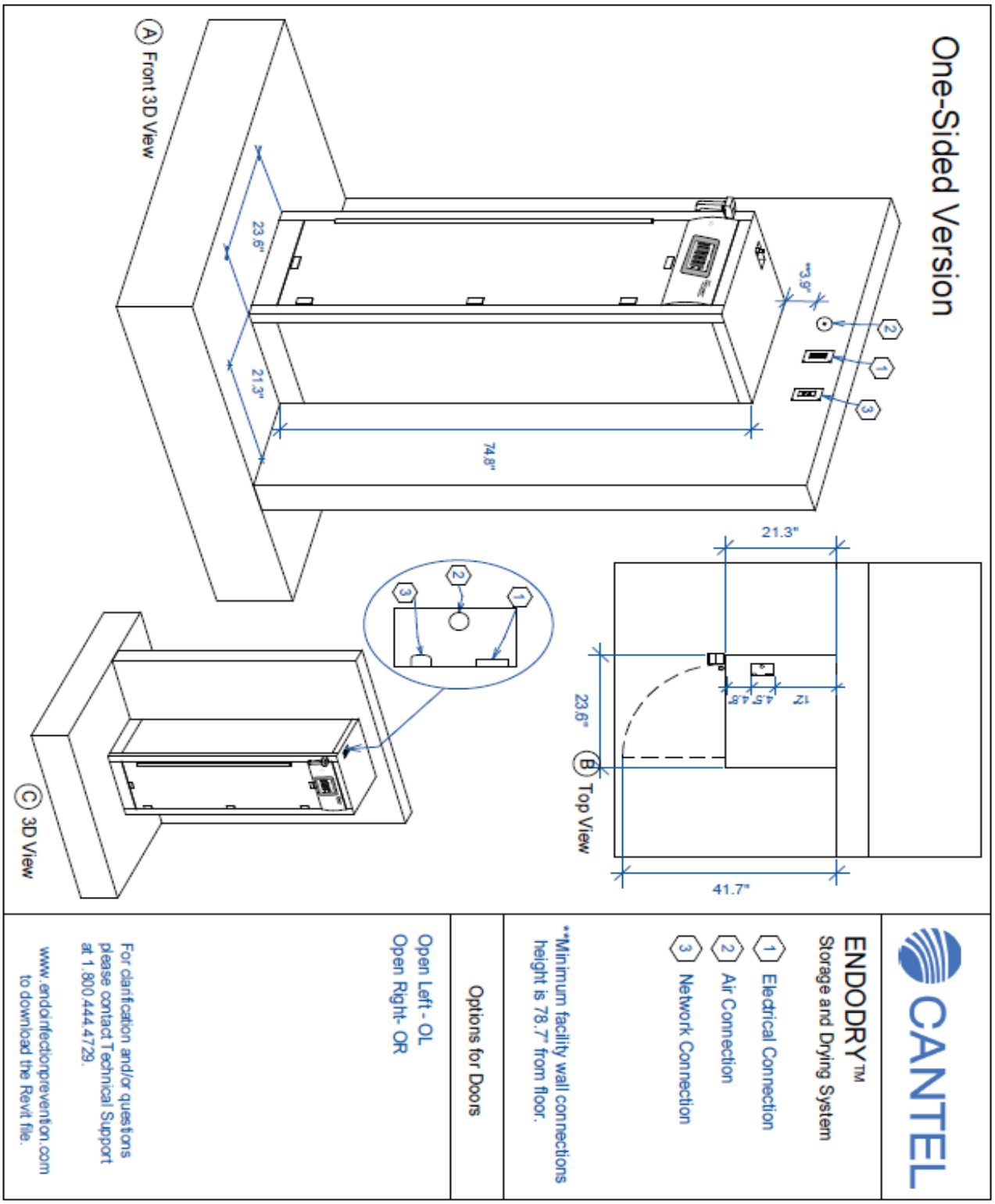

901 Montgomery Street
Decorah, IA 52101

PHONE 563-382-2911
FAX 563-387-3102

WinnMed

WinnMed **Issue Date:** **3/6/2024**
Expansion and Renovation
Decorah, IA 52101
Furniture Specifications

CONTACT: Ben Stevens - CFO
PHONE NUMBER: 563-387-3109

ITEM NUMBER:	22

ITEM NAME:	BLANK		
ROOM NUMBER:		**QUANTITY:**	

SPECIFICATION INFORMATION	

MANUFACTURER:
MODEL #:
DIMENSIONS:
DESCRIPTION:

FURNITURE & EQUIPMENT IMAGE

WinnMed

WinnMed **Issue Date:** **3/6/2024**
Expansion and Renovation
Decorah, IA 52101
Furniture Specifications

CONTACT: Ben Stevens - CFO
PHONE NUMBER: 563-387-3109

ITEM NUMBER:	23

ITEM NAME:	BLANK		
ROOM NUMBER:		**QUANTITY:**	

SPECIFICATION INFORMATION	

MANUFACTURER:
MODEL #:
DIMENSIONS:
DESCRIPTION:

FURNITURE & EQUIPMENT IMAGE

WinnMed

WinnMed **Issue Date:** **3/6/2024**
Expansion and Renovation
Decorah, IA 52101
Furniture Specifications

CONTACT: Ben Stevens - CFO
PHONE NUMBER: 563-387-3109

ITEM NUMBER:	24

ITEM NAME:	Ceiling Mounted Surgical Light		
ROOM NUMBER:		**QUANTITY:**	

SPECIFICATION INFORMATION

MANUFACTURER: Stryker
MODEL #: RD 2207
DIMENSIONS: Endo Room 1 & 2
DESCRIPTION: Ceiling Mounted Surgical Light; Wall Control Display; Sterile Control & Light Handle; Sterile Control Prep; 2 Arm; Qty 1 Monitor Mount

FURNITURE & EQUIPMENT IMAGE

901 Montgomery Street
Decorah, IA 52101

PHONE 563-382-2911
FAX 563-387-3102

WinnMed

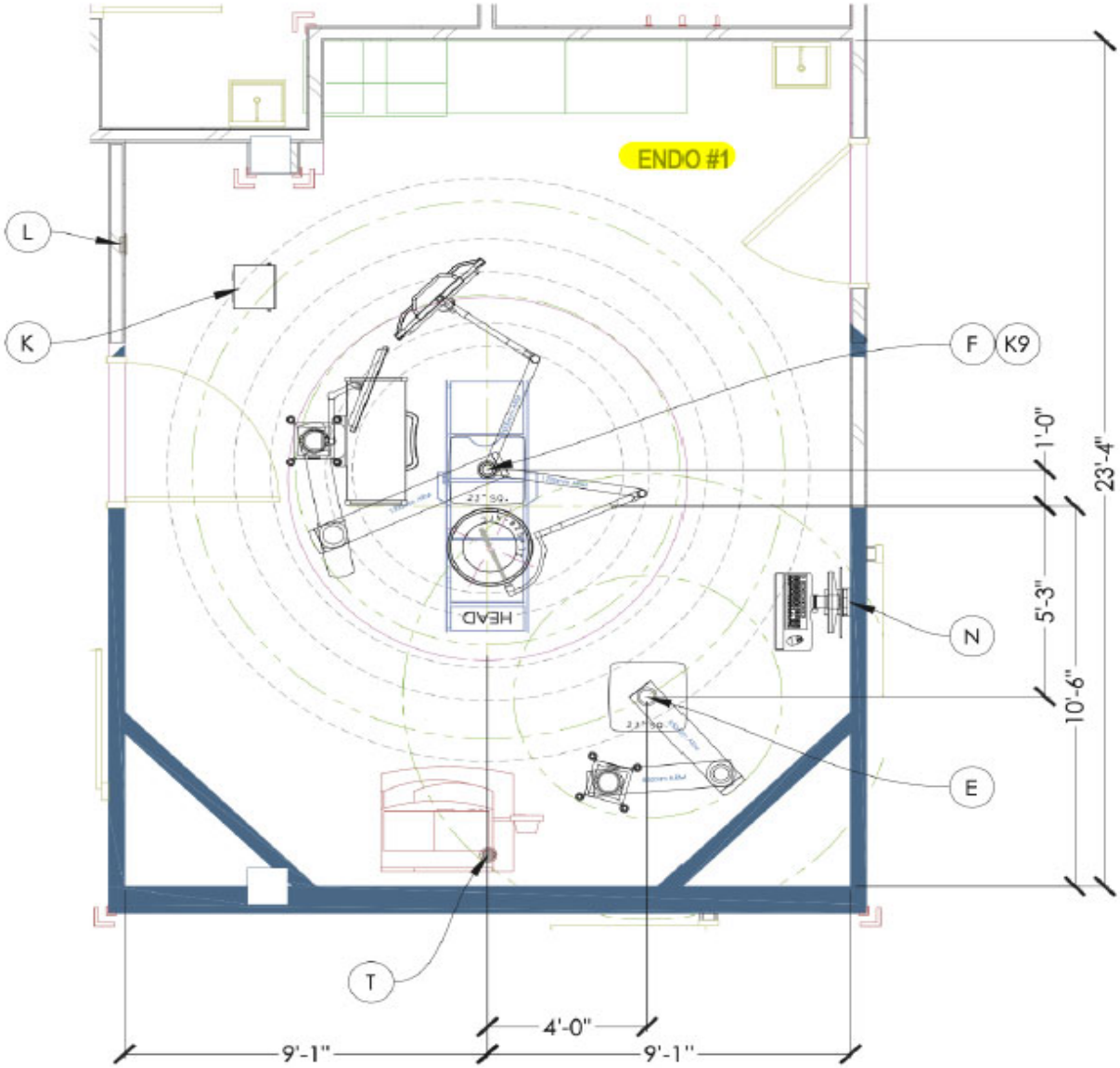

901 Montgomery Street
Decorah, IA 52101

PHONE 563-382-2911
FAX 563-387-3102

WinnMed

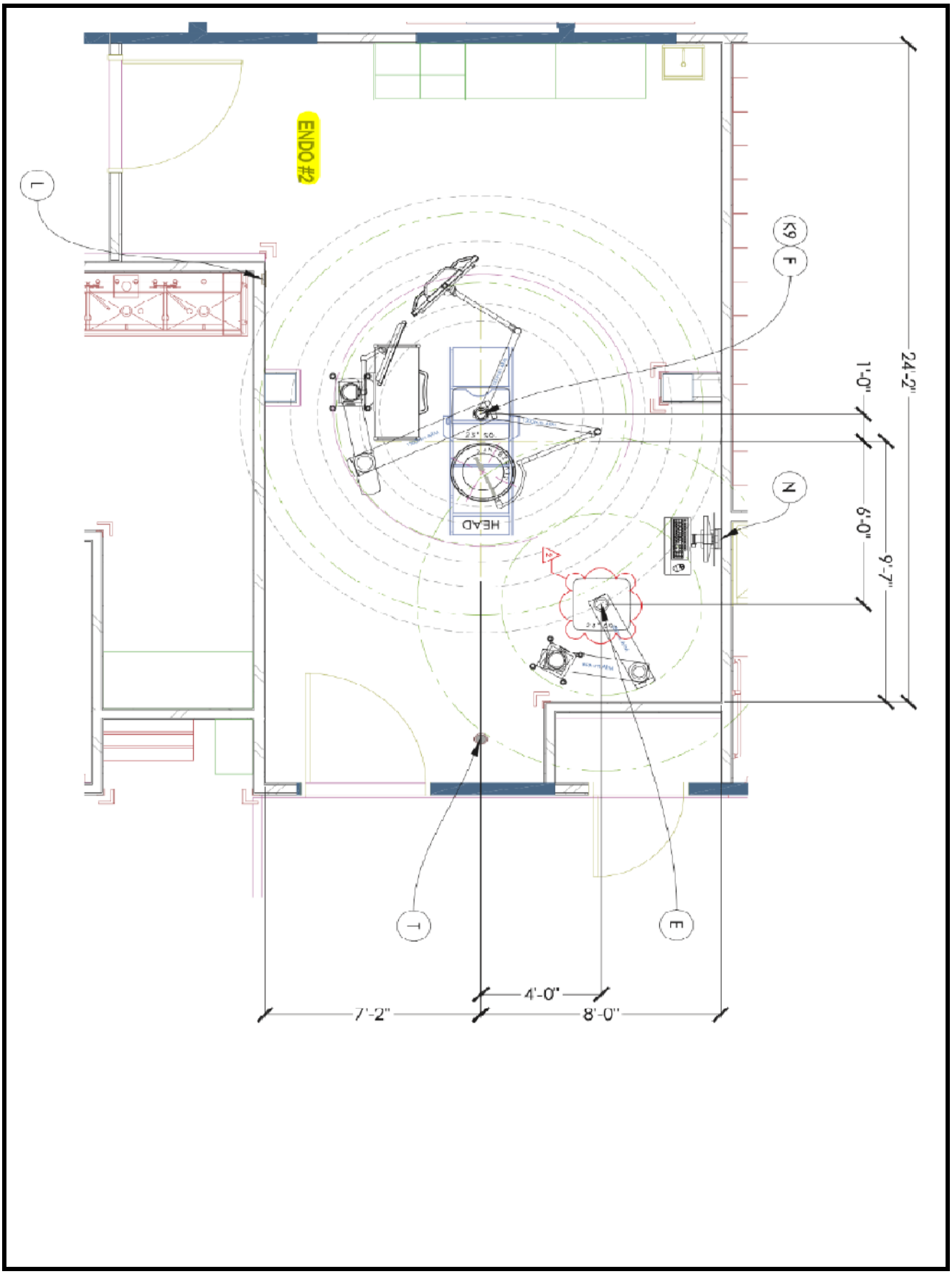

901 Montgomery Street
Decorah, IA 52101

PHONE 563-382-2911
FAX 563-387-3102

Endo Rooms 1 and 2 - TC Equipment Boom / TC F528 Light with UDM

Quote:10179648 Rev:4 Block#:5 / 10

stryker

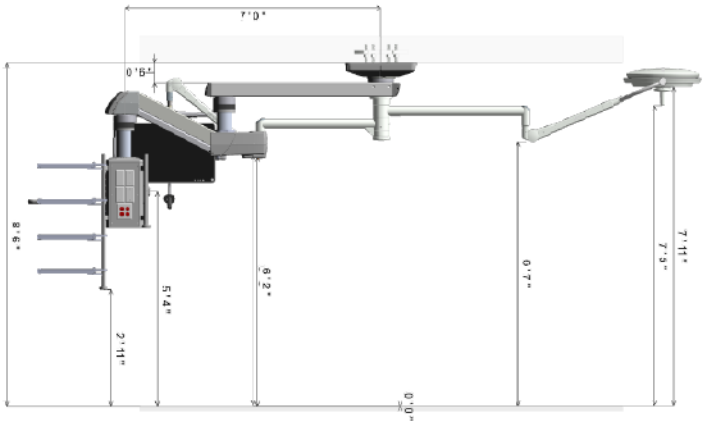

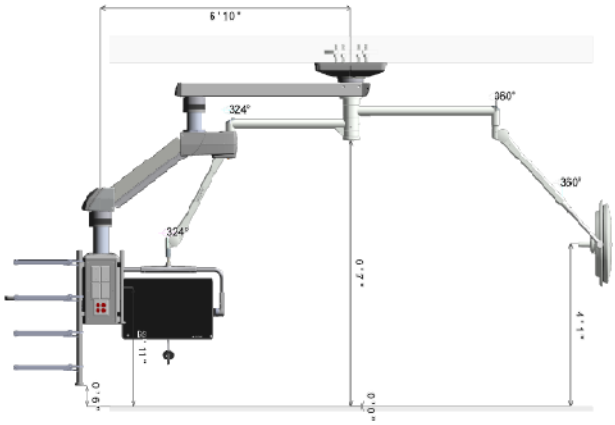

Top S-Series Equipment Boom	
Brake System	Electric
Medical Rail Type	Fairfield
Top Arm Length	1300mm
Bottom Arm Length	900mm
Mic Tube Length	150mm
Column Tube Length	260mm
Weight Capacity (see note 4)	277 lbs.
Total Throat Used (%)	63
Gas Hose Length (ft)	14.77
Packaging Type	Stand Up
Manufacturing Notes	Do Not Assemble Front MFR

Top S-Series Equipment Boom Shelves	
Rail Type	Fairfield
Shelf 1	1000mm
Shelf 2	750mm w/Controls
Shelf 3	750mm
Shelf 4	750mm

TC Configuration - SLX Lights			
Arm No. 1 (MP1)		Arm No. 2 (MP2)	
Equipment	SLX528	Equipment	UDM (19" - 32")
Horizontal Arm	1200	Horizontal Arm	1000
HCT Length	None	HCT Length	None
Tube Length	0	Dual Control	No
Cardanic	NFC	First Monitor	UDM (19" - 32")
Dual Control	No	Video Bundle	StrykerUDM
Mains Voltage	120VAC		

I confirm the ceiling height and agree with the dimensions as drawn. I confirm the equipment configuration as shown including arm lengths, platforms, gas key styles, brand, and locations; electronic, and low voltage selections and locations. I understand that any changes made after an order is in production will result in a change order fee and a delay in shipment.

CUSTOMER APPROVALS	SIGNATURE	PRINT NAME & TITLE	DATE
CLINICAL REPRESENTATIVE			
FACILITY ENGINEERING			

NOTES:

1. For weights, moments, and installation details, please refer to the Stryker Pre-installation manuals.
2. It is the owners responsibility to provide the support structure to meet requirements listed in the Pre-install Manual.
3. Customer is responsible for reviewing and approving Gas Key Style and Manufacturer.
4. Total weigh capacity available for all Stryker and customer supplied accessories, based on weights moments listed in S-SERIES Pre-Install Manual.
5. Bottom of Stryker mounting plate must be installed at 3.0" above finished ceiling plane. All vertical boom dimensions shown in drawing are dependent on this requirement.

Stryker Communications
571 Silveron Blvd.
Flower Mound, TX 75028
PHONE: (817) 789-8106
E-FAX: (408) 754-2969
www.stryker.com

Sales Representative :
Brian Klipfel
brian.klipfel@stryker.com

Project	
Customer: WINNESHIEK MED CTR	
City: DECORAH	State: Iowa
Equip ID: SPS-3-C/F 528/SFP	
Group Name: Endo Rooms 1 and 2	
Quote No.: 10179648	Quote Rev No.: 4
Quote Date: 15-Aug-2023	QTY: 2
Orace Line #: /	
DWG Rev No.: 3	Block # 5 / 10
DWG No.: 10179648S003	

WinnMed

901 Montgomery Street
Decorah, IA 52101

PHONE 563-382-2911
FAX 563-387-3102

Endo Rooms 1 and 2 - TC Equipment Boom

Quote:10179648 Rev:4 Block#:5

stryker

8' 6"

FRONT

F1	20A/125V Duplex (8 Outlets)
F2	Data Pass Thru
F3	Distribution Bd

RIGHT

R1	Blank
R2	Blank
R3	Blank
R4	Blank
R5	20A/125V Duplex (4 Outlets)

BACK

B1	20A/125V Duplex (4 Outlets)
B2	Blank
B3	Blank
B4	VAC
B5	VAC

LEFT

L1	Blank
L2	Blank
L3	Blank
L4	CO2
L5	20A/125V Duplex (4 Outlets)

Data Communicatons

Qty	Description
1	Data Pass Thru
9	1G Blank Plate
1	Distribution Board

Gas Outlets

Qty	Gas Type	Key Style	Manufacturer
1	Carbon Dioxide (CO2)	D.I.S.S.	Beacon Medaes
2	Vacuum	Chemtron	Beacon Medaes

High Voltage

Main Power Type	Isolated
Main Power Source	Emergency
Manufacturer	Leviton

Loc.	Circuit Ref #	# of Circuits	Color	Outlet Box	Description
F1	1,2	2	Red	A	20A/125V Duplex (8 Outlets)
R5	3	1	Red	A	20A/125V Duplex (4 Outlets)
B1	4	1	Red	A	20A/125V Duplex (4 Outlets)
L5	5	1	Red	A	20A/125V Duplex (4 Outlets)

Circuits

Qty	Description
5	Total 15A/20A Circuits
1	Circuit for Motor and Brake

Multi-Functional Rail (MFR)

Front	1000mm
Back	531mm
Control	Rear Only

I confirm the ceiling height and agree with the dimensions as drawn. I confirm the equipment configuration as shown including arm lengths, platforms, gas key styles, brand, and locations; electronic, and low voltage selections and locations. I understand that any changes made after an order is in production will result in a change order fee and a delay in shipment.

CUSTOMER APPROVALS	SIGNATURE	PRINT NAME & TITLE	DATE
CLINICAL REPRESENTATIVE			
FACILITY ENGINEERING			

NOTES:

1. For weights, moments, and installation details, please refer to the Stryker Pre-installation manuals.
2. It is the owners responsibility to provide the support structure to meet requirements listed in the Pre-install Manual.
3. Customer is responsible for reviewing and approving Gas Key Style and Manufacturer.
4. Total weight capacity available for all Stryker and customer supplied accessories, based on weights moments listed in S-SERIES Pre-Install Manual.
5. Bottom of Stryker mounting plate must be installed at 3.0" above finished ceiling plane. All vertical boom dimensions shown in drawing are dependent on this requirement.

Stryker Communications
571 Silveron Blvd.
Flower Mound TX 75028
PHONE: (877) 789-6106
E-FAX: (408) 754-2669
www.stryker.com

Sales Representative :
Brian Klipfel
brian.klipfel@stryker.com

Project:	
Customer: WINNESHIEK MED CTR	
City: DECORAH	State: Iowa
Equip ID: SPS-3-C	
Group Name: Endo Rooms 1 and 2	
Quote No.: 10179648	Quote Rev No.: 4
Quote Date: 15-Aug-2023	QTY: 2
Oracle Line #:	
DWG Rev No.: 3	Block #: 5
DWG No.: 10179648S003	

WinnMed

PHONE 563-382-2911
FAX 563-387-3102

901 Montgomery Street
Decorah, IA 52101

WinnMed

Room: Endo Rooms 1 and 2

TC F528 Light with UDM

SLX Surgical Light

The Stryker Surgical Light combines innovative features, inspired by the best technology, to provide superior light quality for your surgical team. And with so many options to customize, configure, and control your light, you can now enhance the OR experience like never before.

PART #	DESCRIPTION	QTY	LIST PRICE	EXT LIST PRICE
FD 2207	LIGHT / SFP1	2	[redacted]	

Mounting Details

Multiple Suspension Mounting TC Only

Controls

Wall Control Wall mounted (recessed)

Cardanic Control No

Control Unit Type Touch

Light Handle Type Sterile Control+ (Devon slip on)

Power Supply

SK Box Above Ceiling or Surface Mount

Configuration Details

Arm 1 Lighthead

Arm Length 1200

Cardanic Style NFC

Camera Prep No

Arm 2 Monitor bracket

Arm Length 1000

PART #	DESCRIPTION	QTY	LIST PRICE	EXT LIST PRICE
CY 9000150	LIGHT OR FLAT PANEL HANDLE	2	[redacted]	
CY 9000103	UDM INTERSTITIAL AND SUSPENSION CABLES	2		
CY 1008104	MULTI COLOR TOUCH WALL CONTROL DISPLAY FOR S NGLE, DUAL OR TRIPLE F-GENERATION LIGHT CONFIGURATION	2		
CY 9000122	STERILE CONTROL PREP	2		
CY 9000123	STERILE CONTROL+ LIGHT HANDLE	2		

901 Montgomery Street
Decorah, IA 52101

PHONE 563-382-2911
FAX 563-387-3102

WinnMed

WinnMed **Issue Date:** **3/6/2024**
Expansion and Renovation
Decorah, IA 52101
Furniture Specifications

CONTACT: Ben Stevens - CFO
PHONE NUMBER: 563-387-3109

ITEM NUMBER:	25

ITEM NAME:	Ceiling Mounted Equipment Boom		
ROOM NUMBER:		**QUANTITY:**	

SPECIFICATION INFORMATION

MANUFACTURER: Stryker
MODEL #: SPS-3-C
DIMENSIONS: Endo Room 1 & 2
DESCRIPTION: Ceiling Mounted Equipment Boom; 3 Row; 4 Shelves; Foot Pedal Storage Drawer

FURNITURE & EQUIPMENT IMAGE

901 Montgomery Street
Decorah, IA 52101

PHONE 563-382-2911
FAX 563-387-3102

WinnMed

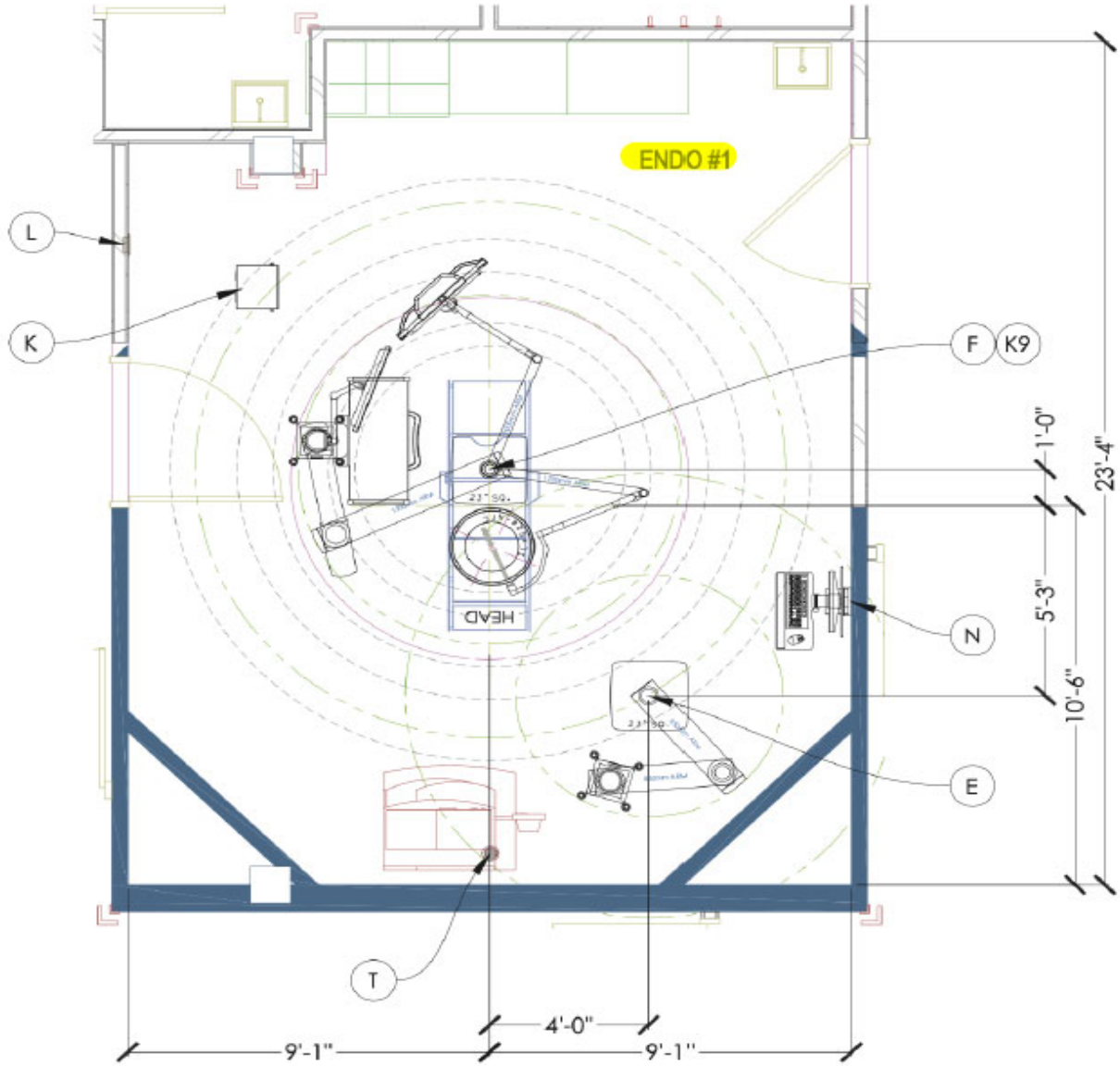

901 Montgomery Street
Decorah, IA 52101

PHONE 563-382-2911
FAX 563-387-3102

WinnMed

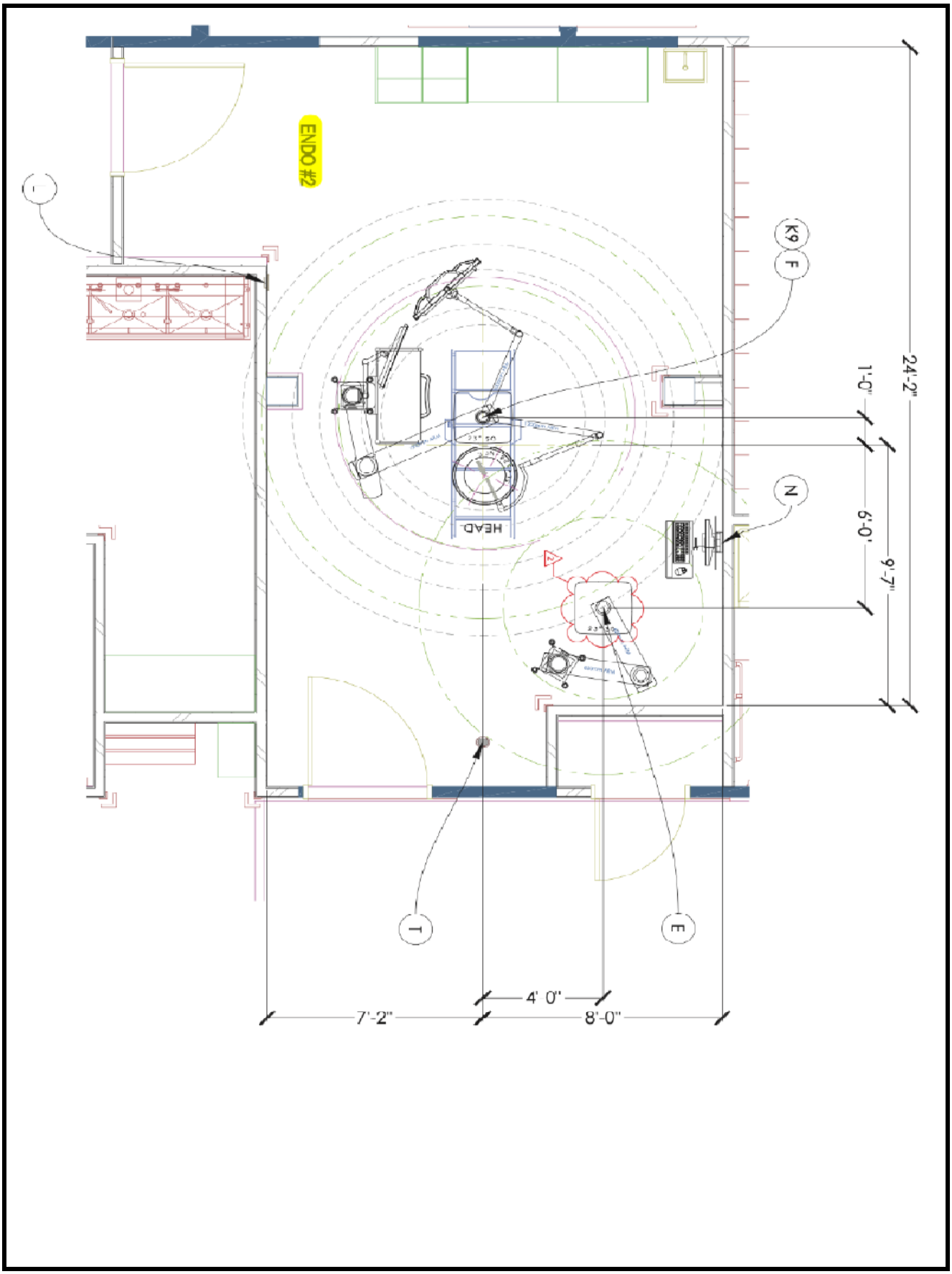

901 Montgomery Street
Decorah, IA 52101

PHONE 563-382-2911
FAX 563-387-3102

WinnMed

Endo Rooms 1 and 2 - TC Equipment Boom / TC F528 Light with UDM

Quote:10179648 Rev:4 Block#:5 / 10

stryker

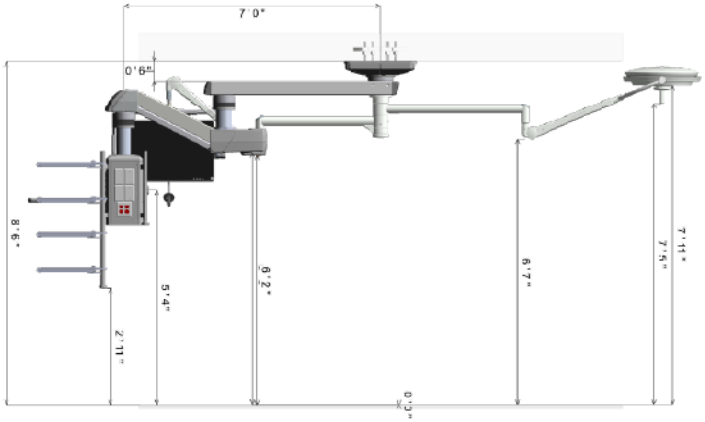

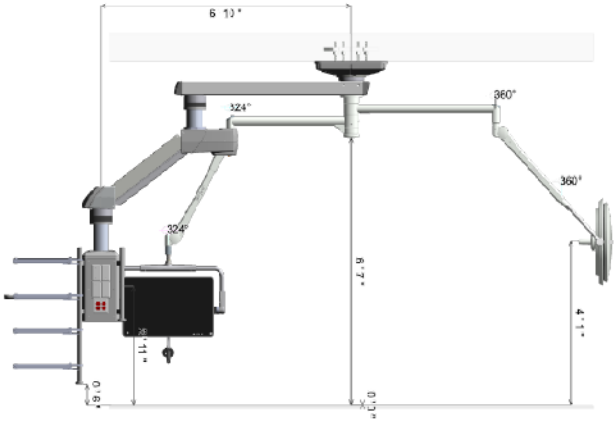

Top S-Series Equipment Boom	
Brake System	Electric
Medical Rail Type	Fairfield
Top Arm Length	1300mm
Bottom Arm Length	500mm
Mid Tube Length	150mm
Column Tube Length	260mm
Weight Capacity (see note 4)	277 lbs.
Total Throat Used (%)	63
Gas Hose Length (ft)	14.77
Packaging Type	Stand Up
Manufacturing Notes	Do Not Assemble Front MFR

Top S-Series Equipment Boom Shelves	
Rail Type	Fairfield
Shelf 1	1000mm
Shelf 2	750mm w/Controls
Shelf 3	750mm
Shelf 4	750mm

TC Configuration - SLX Lights			
Arm No. 1 (MP1)		Arm No. 2 (MP2)	
Equipment	SLX528	Equipment	UDM (19" - 32")
Horizontal Arm	1200	Horizontal Arm	1000
HCT Length	None	HCT Length	None
Tube Length	0	Dual Control	No
Cardanic	NFC	First Monitor	UDM (19" - 32")
Dual Control	No	Video Bundle	StrykerUDM
Mains Voltage	120VAC		

I confirm the ceiling height and agree with the dimensions as drawn. I confirm the equipment configuration as shown including arm lengths, platforms, gas key styles, brand, and locations; electronic, and low voltage selections and locations. I understand that any changes made after an order is in production will result in a change order fee and a delay in shipment.

CUSTOMER APPROVALS	SIGNATURE	PRINT NAME & TITLE	DATE
CLINICAL REPRESENTATIVE			
FACILITY ENGINEERING			

NOTES:

1. For weights, moments, and installation details, please refer to the Stryker Pre-installation manuals.
2. It is the owners responsibility to provide the support structure to meet requirements listed in the Pre-install Manual.
3. Customer is responsible for reviewing and approving Gas Key Style and Manufacturer.
4. Total weight capacity available for all Stryker and customer supplied accessories, based on weights moments listed in S-SERIES Pre-Install Manual.
5. Bottom of Stryker mounting plate must be installed at 3.0" above finished ceiling plane. All vertical boom dimensions shown in drawing are dependent on this requirement.

Stryker Communications
1021 Silverton Blvd
Flower Mound, TX 75028
PHONE: (877) 739-8186
E-FAX: (408) 754-2969
www.stryker.com

Sales Representative :
Brian Klipfel
brian.klipfel@stryker.com

Project:	
Customer: WINNESHIEK MED CTR	
City: DECORAH	State: Iowa
Equip ID: SPS-3-C/F 528/SFP	
Group Name: Endo Rooms 1 and 2	
Quote No.: 10179648	Quote Rev No.: 4
Quote Date: 15-Aug-2023	QTY: 2
Oracle Line #: /	
DWG Rev No.: 3	Block #: 5 / 10
DWG No.: 10179648S003	

PHONE 563-382-2911
FAX 563-387-3102

901 Montgomery Street
Decorah, IA 52101

Endo Rooms 1 and 2 - TC Equipment Boom

Quote:10179648 Rev:4 Block#:5

stryker

8' 6"

FRONT

F1	20A/125V Duplex (8 Outlets)
F2	Data Pass Thru
F3	Distribution Bd

RIGHT

R1	Blank
R2	Blank
R3	Blank
R4	Blank
R5	20A/125V Duplex (4 Outlets)

BACK

B1	20A/125V Duplex (4 Outlets)
B2	Blank
B3	Blank
B4	VAC
B5	VAC

LEFT

L1	Blank
L2	Blank
L3	Blank
L4	CO2
L5	20A/125V Duplex (4 Outlets)

Data Communications

Qty	Description
1	Data Pass Thru
9	1G Blank Plate
1	Distribution Board

Gas Outlets

Qty	Gas Type	Key Style	Manufacturer
1	Carbon Dioxide (CO2)	D.I.S.S.	Beacon Medaes
2	Vacuum	Chemron	Beacon Medaes

High Voltage

Main Power Type	Isolated
Main Power Source	Emergency
Manufacturer	Leviton

Loc.	Circuit Ref #	# of Circuits	Color	Outlet Box	Description
F1	1,2	2	Red	A	20A/125V Duplex (8 Outlets)
R5	3	1	Red	A	20A/125V Duplex (4 Outlets)
B1	4	1	Red	A	20A/125V Duplex (4 Outlets)
L5	5	1	Red	A	20A/125V Duplex (4 Outlets)

Circuits

Qty	Description
5	Total 15A/20A Circuits
1	Circuit for Motor and Brake

Multi-Functional Rail (MFR)

Front	1000mm
Back	531mm
Control	Rear Only

I confirm the ceiling height and agree with the dimensions as drawn. I confirm the equipment configuration as shown including arm lengths, platforms, gas key styles, brand, and locations; electronic, and low voltage selections and locations. I understand that any changes made after an order is in production will result in a change order fee and a delay in shipment.

CUSTOMER APPROVALS	SIGNATURE	PRINT NAME & TITLE	DATE
CLINICAL REPRESENTATIVE			
FACILITY ENGINEERING			

NOTES:

1. For weights, moments, and installation details, please refer to the Stryker Pre-installation manuals.
2. It is the owners responsibility to provide the support structure to meet requirements listed in the Pre-Install Manual.
3. Customer is responsible for reviewing and approving Gas Key Style and Manufacturer.
4. Total weight capacity available for all Stryker and customer supplied accessories, based on weights moments listed in S-SERIES Pre-Install Manual.
5. Bottom of Stryker mounting plate must be installed at 3.0" above finished ceiling plane. All vertical boom dimensions shown in drawing are dependent on this requirement.

Stryker Communications
571 Silveron Blvd.
Flower Mound, TX 75028
PHONE: (877) 785-8106
E-FAX: (408) 754-2969
www.stryker.com

Sales Representative :
Brian Klipfel
brian.klipfel@stryker.com

Project:	
Customer: WINNESHIEK MED CTR	
City: DECORAH	State: Iowa
Equip ID: SPS-3-C	
Group Name: Endo Rooms 1 and 2	
Quote No.: 10179648	Quote Rev No.: 4
Quote Date: 15-Aug-2023	QTY: 2
Oracle Line #:	
DWG Rev No.: 3	Block #: 5
DWG No.: 10179648S003	

WinnMed

PHONE 563-382-2911
FAX 563-387-3102

901 Montgomery Street
Decorah, IA 52101

WinnMed

Room: Endo Rooms 1 and 2 — TC Equipment Boom

S-Series Standard Equipment Management System

Introducing a new standard in equipment management. With a completely redesigned user interface and a compact, fully customizable system, it has never been easier to manage your services and maneuver your equipment.

PART #	DESCRIPTION	QTY	LIST PRICE	EXT LIST PRICE
SPS-3-C	S-SERIES, STANDARD POWERED, 3 ROW, 2 A	2	[redacted]	

Mounting Details
- Mounting Plate: Single Common Plate
- Multiple Suspension Mounting: TC Only
- Ceiling Cover: Standalone
- Brake System: Electric

MFR Configuration
- Front MFR Length: 1000mm
- Rear MFR Length: 531mm
- MFR Controls: Rear Only

Shelves
- Shelves: 4
- Shelf Rail Type: Fairfield
- Shelf 1: 1000mm
- Shelf 2: 750mm w/Controls
- Shelf 3: 750mm
- Shelf 4: 750mm

High Voltage Services
- 20A/125V Duplex (8 Outlets): 1
- 20A/125V Duplex (4 Outlets): 3

Low Voltage Services
- Blank Plate: 9
- Distribution Bd Plate: 1
- Data Pass Thru Plate: 1

Additional Cables

Gas Services
- Gas Manufacturer: Beacon Medaes
- Gas Fitting Type: Chemetron
- CO2 Gas: 1
- Vac Gas: 2

PART #	DESCRIPTION	QTY	LIST PRICE	EXT LIST PRICE
P40075	ASM, HANDLE AND SHELF WITH FAIRF ELD R	2	[redacted]	
P36143	ASM, SHELF MOUNT HDW	8		
P40239	ASM, SHELF WITH FA RFIELD RA LS, 1000,	2		
P40238	ASM, SHELF WITH FA RFIELD RA LS, 750,	4		
P34414	KIT, FOOT PEDAL STORAGE DRAWER, ATLAS	2		
Configuration Total:			[redacted]	

901 Montgomery Street
Decorah, IA 52101

PHONE 563-382-2911
FAX 563-387-3102

WinnMed

WinnMed **Issue Date:** **3/6/2024**
Expansion and Renovation
Decorah, IA 52101
Furniture Specifications

CONTACT: Ben Stevens - CFO
PHONE NUMBER: 563-387-3109

ITEM NUMBER:	26

ITEM NAME:	Ceiling Mounted Anesthesia Boom		
ROOM NUMBER:		**QUANTITY:**	

SPECIFICATION INFORMATION

MANUFACTURER: Stryker
MODEL #: SFS-2
DIMENSIONS: Endo Room 1 & 2
DESCRIPTION: Ceiling Mounted Anesthesia Boom; 2 Row; 2 Arm, Air (1); VAC (2); N2O (1); O2 (2); WAGD (1)

FURNITURE & EQUIPMENT IMAGE

901 Montgomery Street
Decorah, IA 52101

PHONE 563-382-2911
FAX 563-387-3102

WinnMed

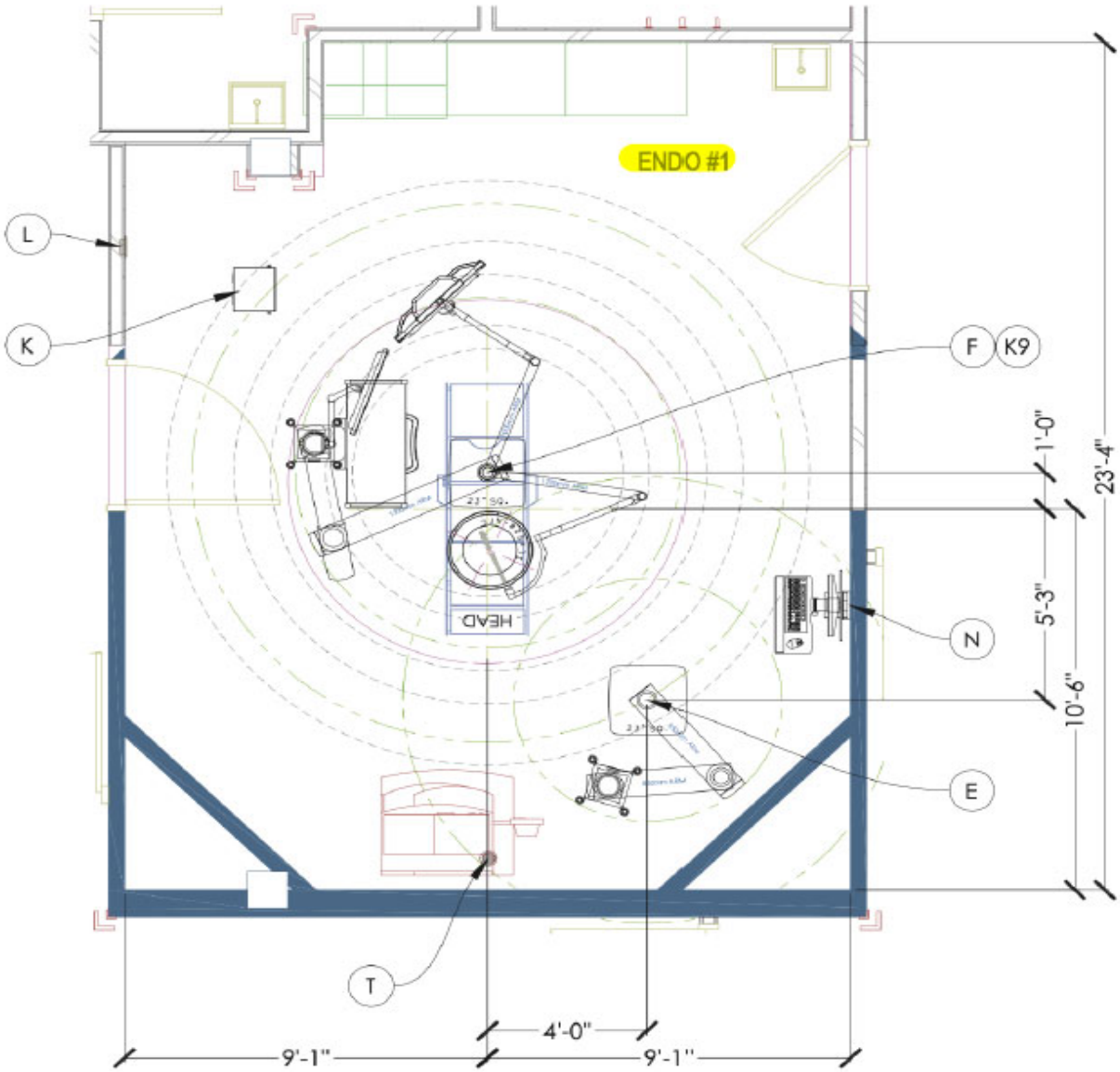

901 Montgomery Street
Decorah, IA 52101

PHONE 563-382-2911
FAX 563-387-3102

WinnMed

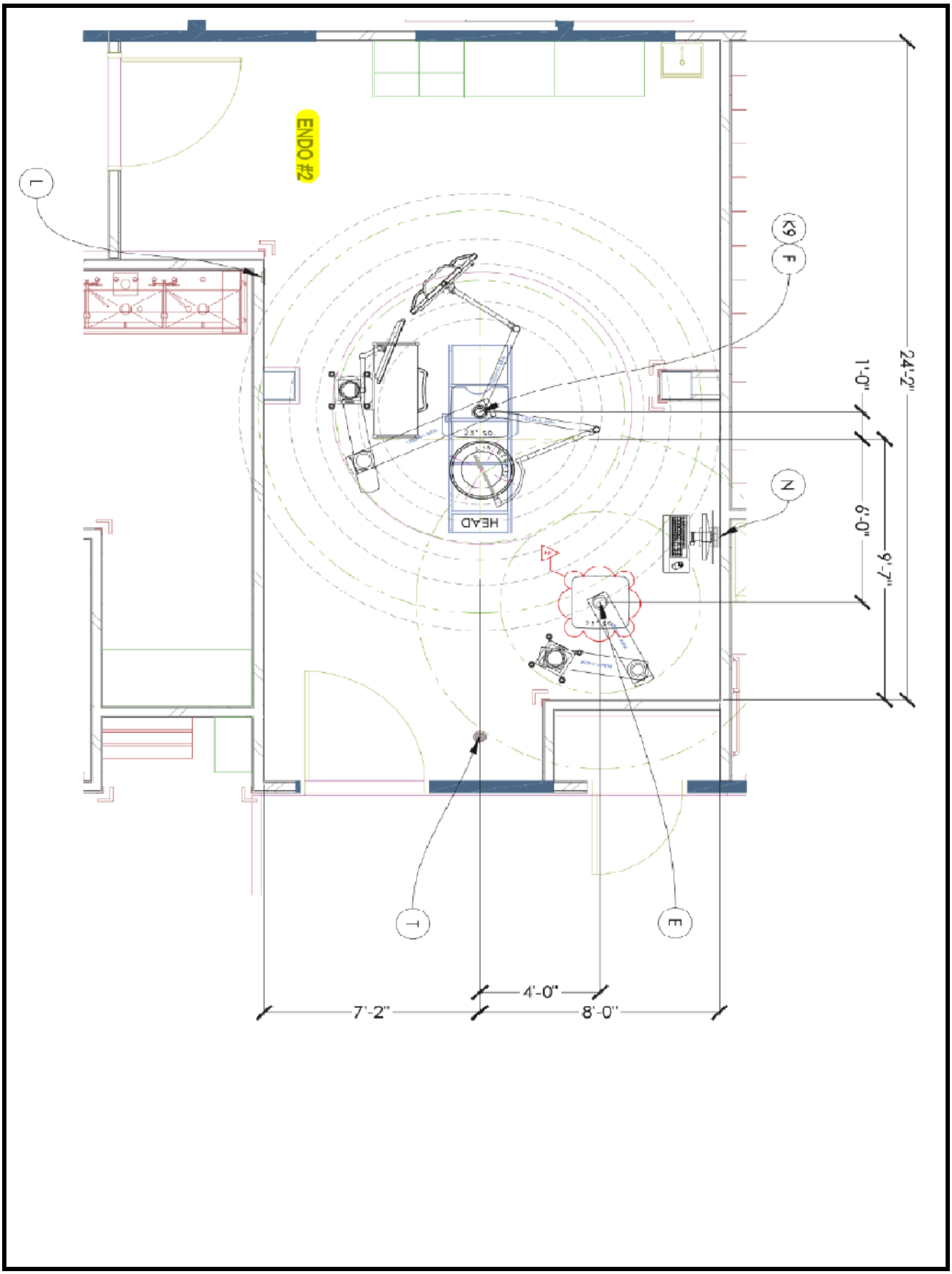

901 Montgomery Street
Decorah, IA 52101

PHONE 563-382-2911
FAX 563-387-3102

WinnMed

Endo Rooms 1 and 2 - Anesthesia Boom

Quote:10179648 Rev:4 Block#:18

stryker

8' 6"

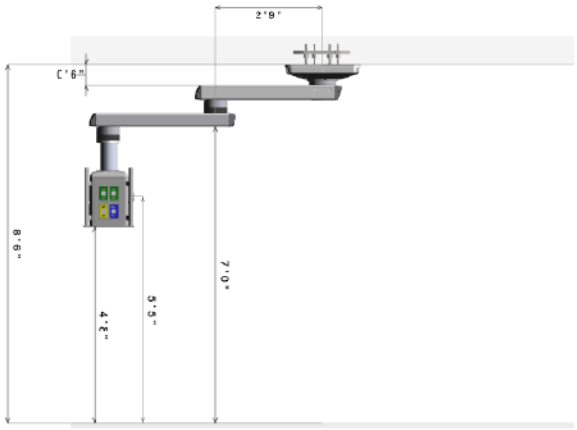

Suspension	
Brake System	Electric
Medical Rail Type	Fairfield
Top Arm Length	850mm
Bottom Arm Length	850mm
Column Tube Length	260mm
Weight Capacity (see note 4)	500 lbs.
Total Throat Used (%)	49
Gas Hose Length (ft)	11.98
Packaging Type	Stand Up
Manufacturing Notes	Assemble All MFR's

I confirm the ceiling height and agree with the dimensions as drawn. I confirm the equipment configuration as shown including arm lengths, platforms, gas key styles, brand, and locations: electronic, and low voltage selections and locations. I understand that any changes made after an order is in production will result in a change order fee and a delay in shipment.

CUSTOMER APPROVALS	SIGNATURE	PRINT NAME & TITLE	DATE
CLINICAL REPRESENTATIVE			
FACILITY ENGINEERING			

NOTES:

1. For weights, moments, and installation details, please refer to the Stryker Pre-installation manuals.
2. It is the owners responsibility to provide the support structure to meet requirements listed in the Pre-install Manual.
3. Customer is responsible for reviewing and approving Gas Key Style and Manufacturer.
4. Total weight capacity available for all Stryker and customer supplied accessories, based on weights moments listed in S-SERIES Pre-Install Manual.
5. Bottom of Stryker mounting plate must be installed at 3.0" above finished ceiling plane. All vertical boom dimensions shown in drawing are dependent on this requirement.

Stryker Communications
571 Silveron Blvd.
Flower Mound, TX 75028
PHONE: (877) 789-8106
E-FAX: (408) 754-2969
www.stryker.com

Sales Representative :
Brian Klipfel
brian.klipfel@stryker.com

Project:	
Customer: WINNESHIEK MED CTR	
City: DECORAH	State: Iowa
Equip ID: SFS-2	
Group Name: Endo Rooms 1 and 2	
Quote No.: 10179648	Quote Rev No.: 4
Quote Date: 15-Aug-2023	QTY: 2
Oracle Line #:	
DWG Rev No.: 6	Block #: 18
DWG No.: 10179648S006	

PHONE 563-382-2911
FAX 563-387-3102

901 Montgomery Street
Decorah, IA 52101

Endo Rooms 1 and 2 - Anesthesia Boom

Quote:10179648 Rev:4 Block#:18

stryker

8' 6"

FRONT

F1	3rd Party Data Plate 1G
F2	Distribution Bd
F3	20A/125V Duplex (4 Outlets)

RIGHT

R1	O2
R2	O2
R3	Med Air
R4	N2O

BACK

B1	20A/125V Duplex (4 Outlets)
B2	Singe DVI
B3	20A/125V-5-20R Duplex

LEFT

L1	WAGD
L2	Blank
L3	VAC
L4	VAC

Data Communications

Qty	Description
1	1G Blank Plate
1	1G Blank W/String
1	Single DVI
1	Distribution Board

Gas Outlets

Qty	Gas Type	Key Style	Manufacturer
2	Oxygen (O2)	Chemtron	Beacon Medaes
1	Nitrous Oxide (N2O)	Chemtron	Beacon Medaes
1	Medical Air	Chemtron	Beacon Medaes
2	Vacuum	Chemtron	Beacon Medaes
1	WAGD	Chemtron	Beacon Medaes

High Voltage

Main Power Type	Isolated
Main Power Source	Emergency
Manufacturer	Leviton

Loc.	Circuit Ref #	# of Circuits	Color	Outlet Box	Description
F3	1	1	Red	A	20A/125V Duplex (4 Outlets)
B1	2	1	Red	A	20A/125V Duplex (4 Outlets)
B3	3	1	Red	A	20A/125V-5-20R Duplex

Circuits

Qty	Description
3	Total 15A/20A Circuits
1	Circuit for Motor and Brake

Multi-Functional Rail (MFR)

Front	406mm
Back	406mm
Control	Rear Only

I confirm the ceiling height and agree with the dimensions as drawn. I confirm the equipment configuration as shown including arm lengths, platforms, gas key styles, brand, and locations; electronic, and low voltage selections and locations. I understand that any changes made after an order is in production will result in a change order fee and a delay in shipment.

CUSTOMER APPROVALS	SIGNATURE	PRINT NAME & TITLE	DATE
CLINICAL REPRESENTATIVE			
FACILITY ENGINEERING			

NOTES:

1. For weights, moments, and installation details, please refer to the Stryker Pre-installation manuals.
2. It is the owners responsibility to provide the support structure to meet requirements listed in the Pre-install Manual.
3. Customer is responsible for reviewing and aproving Gas Key Style and Manufacturer.
4. Total weight capacity available for all Stryker and customer supplied accessories, based on weights moments listed in S-SERIES Pre-Install Manual.
5. Bottom of Stryker mounting plate must be installed at 3.0" above finished ceiling plane. All vertical boom dimensions shown in drawing are dependent on this requirement.

Stryker Communications
571 Silveron Blvd.
Flower Mound, TX 75028
PHONE: (877) 789-8106
E-FAX: (408) 754-2999
www.stryker.com

Sales Representative :
Brian Klipfel
brian.klipfel@stryker.com

Project:	
Customer: WINNESHIEK MED CTR	
City: DECORAH	State: Iowa
Equip ID: SFS-2	
Group Name: Endo Rooms 1 and 2	
Quote No.: 10179648	Quote Rev No.: 4
Quote Date: 15-Aug-2023	QTY: 2
Oracle Line #:	
DWG Rev No.: 6	Block #: 18
DWG No.: 10179648S006	

WinnMed

PHONE 563-382-2911
FAX 563-387-3102

901 Montgomery Street
Decorah, IA 52101

WinnMed

Room: Endo Rooms 1 and 2

Anesthesia Boom

PART #	DESCRIPTION	QTY	LIST PRICE	EXT LIST PRICE
SFS-2	S-SERIES, STANDARD FIXED, 2 ROW, 2 ARM	2	[redacted]	

Mounting Details
- Mounting Plate: Single Common Plate
- Ceiling Cover: Standalone
- Brake System: Electric

MFR Configuration
- Front MFR Length: 406mm
- Rear MFR Length: 406mm
- MFR Controls: Rear Only

Shelves
- Shelves: 0

High Voltage Services
- 20A/125V-5-20R Duplex: 1
- 20A/125V Duplex (4 Outlets): 2

Low Voltage Services
- Blank Plate: 1
- 3rd Party Data Plate 1G Plate: 1
- Single DVI Plate: 1
- Distribution Bd Plate: 1

Additional Cables

Gas Services
- Gas Manufacturer: Beacon Medaes
- Gas Fitting Type: Chemetron
- Air Gas: 1
- Vac Gas: 2
- N20 Gas: 1
- O2 Gas: 2
- WAGD Gas: 1

PART #	DESCRIPTION	QTY	LIST PRICE	EXT LIST PRICE
P39064	ASSEMBLY, SINGLE DVI PLATE AND CABLE	2	[redacted]	

Configuration Total: [redacted]

901 Montgomery Street
Decorah, IA 52101

PHONE 563-382-2911
FAX 563-387-3102

WinnMed

WinnMed **Issue Date:** **3/6/2024**
Expansion and Renovation
Decorah, IA 52101
Furniture Specifications

CONTACT: Ben Stevens - CFO
PHONE NUMBER: 563-387-3109

ITEM NUMBER:	27

ITEM NAME:	Endoscopy Room Ancillary Parts		
ROOM NUMBER:		**QUANTITY:**	

SPECIFICATION INFORMATION

MANUFACTURER: Stryker
MODEL #:
DIMENSIONS: Endo Room 1 & 2
DESCRIPTION: Endoscopic Room Ancillary Parts; DVI Monitor Ports (Total 6); Cable Assembly; Fiber Optic; DVI Plate; BNC Plate and Cable

FURNITURE & EQUIPMENT IMAGE

901 Montgomery Street
Decorah, IA 52101

PHONE 563-382-2911
FAX 563-387-3102

WinnMed

Room: Endo Rooms 1 and 2

stryker Ancillary Parts

PART #	DESCRIPTION	QTY	LIST PRICE	EXT LIST PRICE
0678000541	DVI UPGRADE EXTRA MONITOR	6	[redacted]	
0100224468	CABLE ASSY, RUGGED F BER OPTIC DVI	4		
0678000978	ASSY. S NGLE GANG DVI PLATE	2		
P38061	ASSEMBLY, SINGLE BNC PLATE AND CABLE	2		
Ancillary Parts Total:				

901 Montgomery Street
Decorah, IA 52101

PHONE 563-382-2911
FAX 563-387-3102

WinnMed

WinnMed **Issue Date:** **3/6/2024**
Expansion and Renovation
Decorah, IA 52101
Furniture Specifications

CONTACT: Ben Stevens - CFO
PHONE NUMBER: 563-387-3109

ITEM NUMBER:	28

ITEM NAME:	OR 1 Surgical Light		
ROOM NUMBER:		**QUANTITY:**	

SPECIFICATION INFORMATION

MANUFACTURER: Stryker
MODEL #:
DIMENSIONS: OR 1
DESCRIPTION: OR 1 Surgical Light w/ Monitor; 2 Arm; Handle Integrated Camera; Wall Control Display; Sterile Control Prep & Light Handle

FURNITURE & EQUIPMENT IMAGE

901 Montgomery Street
Decorah, IA 52101

PHONE 563-382-2911
FAX 563-387-3102

WinnMed

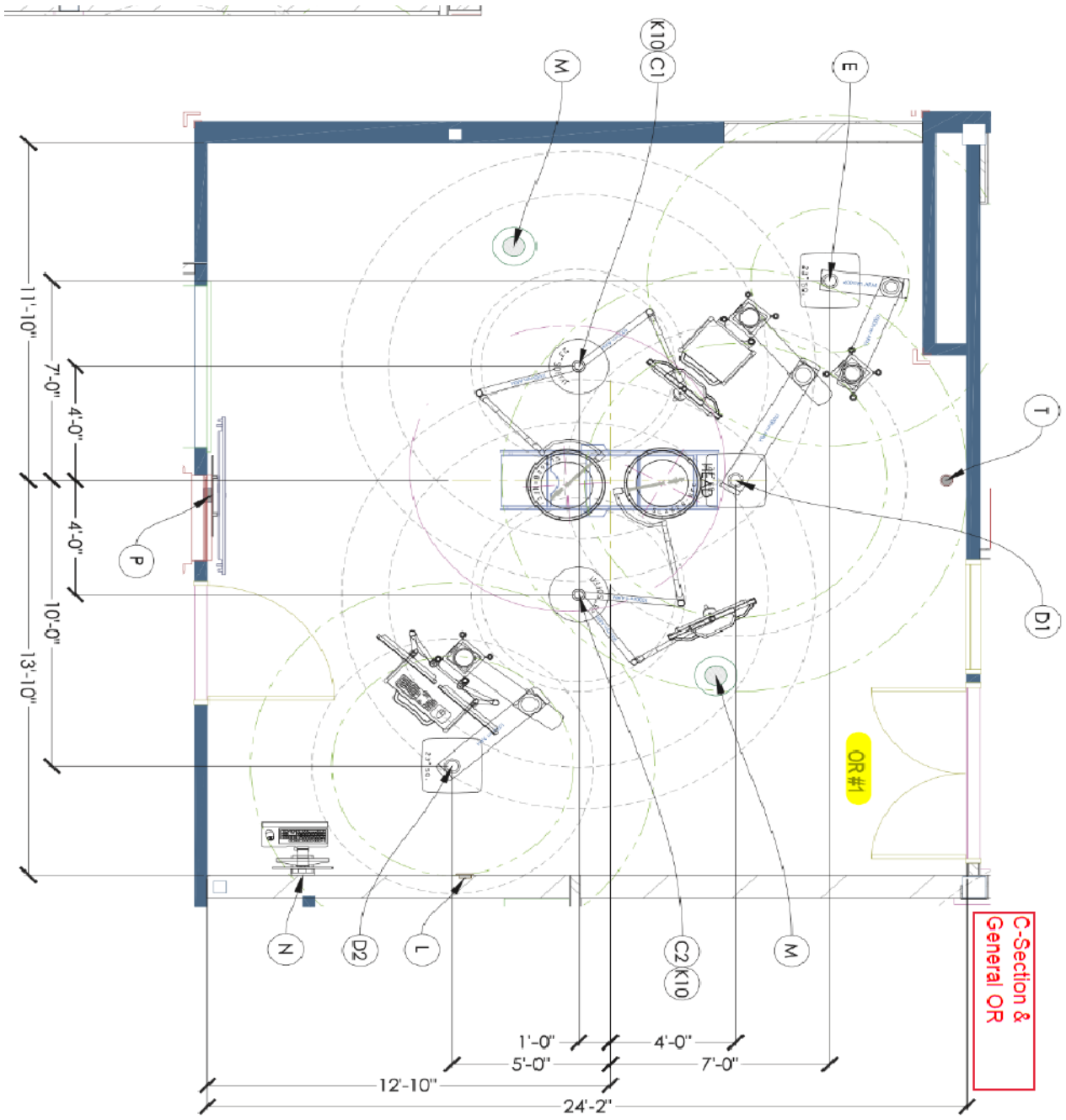

901 Montgomery Street
Decorah, IA 52101

PHONE 563-382-2911
FAX 563-387-3102

OR 1 - SLX Light with UDM and ILC

Quote:10179648 Rev:4 Block#:11

stryker

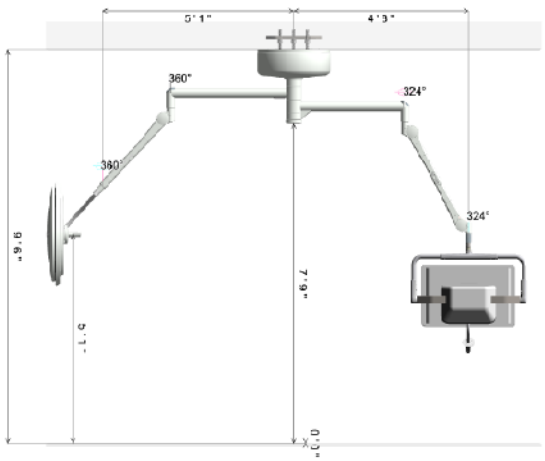

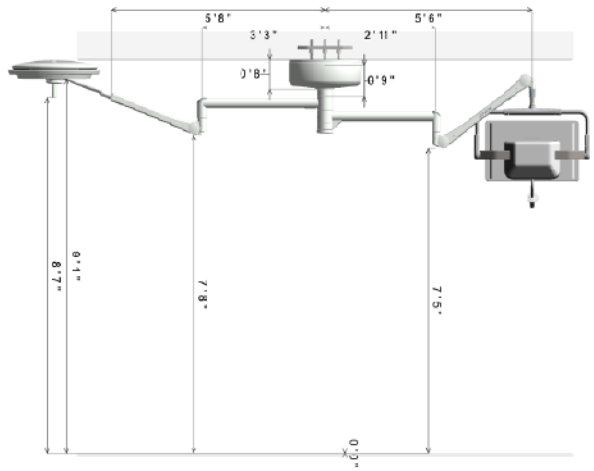

Main Mount	
Mounting Plate Type	Single Common Plate
Ceiling Cover	CB 5423004
Tube Length	230
Electronics in SK Box	No
Wall Control?	Yes
Camera Type	StrykeCam HD
Central Endo Lite	No
Wall Control Type	recessed
Light Handle Type	Berchtold
Device Control	No
First Configuration?	Yes

Arm No.1 (MP1)	
Equipment	SLXG28
Horizontal Arm	1000
HCT Length	None
Cardanic	NFC
Dual Control	No
Mains Voltage	120VAC

Arm No.2 (MP2)	
Equipment	UDM (19" - 32")
Horizontal Arm	900
HCT Length	None
Dual Control	No
First Monitor	UDM (19" - 32")
Video Bundle	StrykerUDM

I confirm the ceiling height and agree with the dimensions as drawn. I confirm the equipment configuration as shown including arm lengths, platforms, gas key styles, brand, and locations; electronic, and low voltage selections and locations. I understand that any changes made after an order is in production will result in a change order fee and a delay in shipment.

CUSTOMER APPROVALS	SIGNATURE	PRINT NAME & TITLE	DATE
CLINICAL REPRESENTATIVE			
FACILITY ENGINEERING			

NOTES:

1. For weights, moments, and installation details, please refer to the Stryker Pre-installation manuals.
2. It is the owners responsibility to provide the support structure to meet requirements listed in the Pre-install Manual.

Stryker Communications
571 Silveron Blvd.
Flower Mound, TX 75028
PHONE: (877) 789-8104
E-FAX: (408) 754-2969
www.stryker.com

Sales Representative :
Brian Klipfel
brian.klipfel@stryker.com

Project:	
Customer: WINNESHIEK MED CTR	
City: DECORAH	State: Iowa
Equip ID: F 628/SFP	
Group Name: OR 1	
Quote No.: 10179648	Quote Rev No.: 4
Quote Date: 15-Aug-2023	QTY: 1
Oracle Line #:	
DWG Rev No.: 2	Block #: 11
DWG No.: 10179648C002	

WinnMed

901 Montgomery Street
Decorah, IA 52101

PHONE 563-382-2911
FAX 563-387-3102

WinnMed

Room: OR 1

SLX Light with UDM and ILC

SLX Surgical Light

The Stryker Surgical Light combines innovative features, inspired by the best technology, to provide superior light quality for your surgical team. And with so many options to customize, configure, and control your light, you can now enhance the OR experience like never before.

PART #	DESCRIPTION	QTY	LIST PRICE	EXT LIST PRICE
FD 2203	LIGHT / SFP1	1	[redacted]	

Mounting Details
- **Mounting Plate** Single Common Plate
- **Multiple Suspension Mounting** None
- **Ceiling Cover** CB 5423004 590x197 TD 125mm
- **Drop Tube Length** 230

Controls
- **Wall Control** Wall mounted (recessed)
- **Cardanic Control** No
- **Control Unit Type** Touch
- **Light Handle Type** Sterile Control+ (Devon slip on)

Power Supply
- **SK Box** Above Ceiling or Surface Mount

Configuration Details
- **Arm 1** Lighthead
- **Arm Length** 1000
- **Cardanic Style** NFC
- **Camera Prep** Yes
- **Arm 2** Monitor bracket
- **Arm Length** 900

PART #	DESCRIPTION	QTY	LIST PRICE	EXT LIST PRICE
P36000	STRYKECAM FOR F-GEN	1	[redacted]	
P43779	BUNDLE, STRYKECAM READY	1		
CY 9000150	LIGHT OR FLAT PANEL HANDLE	1		
CY 9000103	UDM INTERSTITIAL AND SUSPENSION CABLES	1		
CY 9600105	PREPARATION CAMERA STRYKECAM HD	1		
CY 1008104	MULTI COLOR TOUCH WALL CONTROL DISPLAY FOR S NGLE, DUAL OR TRIPLE F-GENERATION LIGHT CONFIGURATION	1		
CY 9000122	STERILE CONTROL PREP	1		
CY 9000123	STERILE CONTROL+ LIGHT HANDLE	1		
Configuration Total:			[redacted]	

901 Montgomery Street
Decorah, IA 52101

PHONE 563-382-2911
FAX 563-387-3102

WinnMed

WinnMed **Issue Date:** **3/6/2024**
Expansion and Renovation
Decorah, IA 52101
Furniture Specifications

CONTACT: Ben Stevens - CFO
PHONE NUMBER: 563-387-3109

ITEM NUMBER:	29

ITEM NAME:	OR 1 Surgical Light		
ROOM NUMBER:		**QUANTITY:**	

SPECIFICATION INFORMATION

MANUFACTURER: Stryker
MODEL #:
DIMENSIONS: OR 1
DESCRIPTION: OR 1 Surgical Light w/ Monitor; 2 Arm; Sterile Control Prep & Light Handle

FURNITURE & EQUIPMENT IMAGE

901 Montgomery Street
Decorah, IA 52101

PHONE 563-382-2911
FAX 563-387-3102

WinnMed

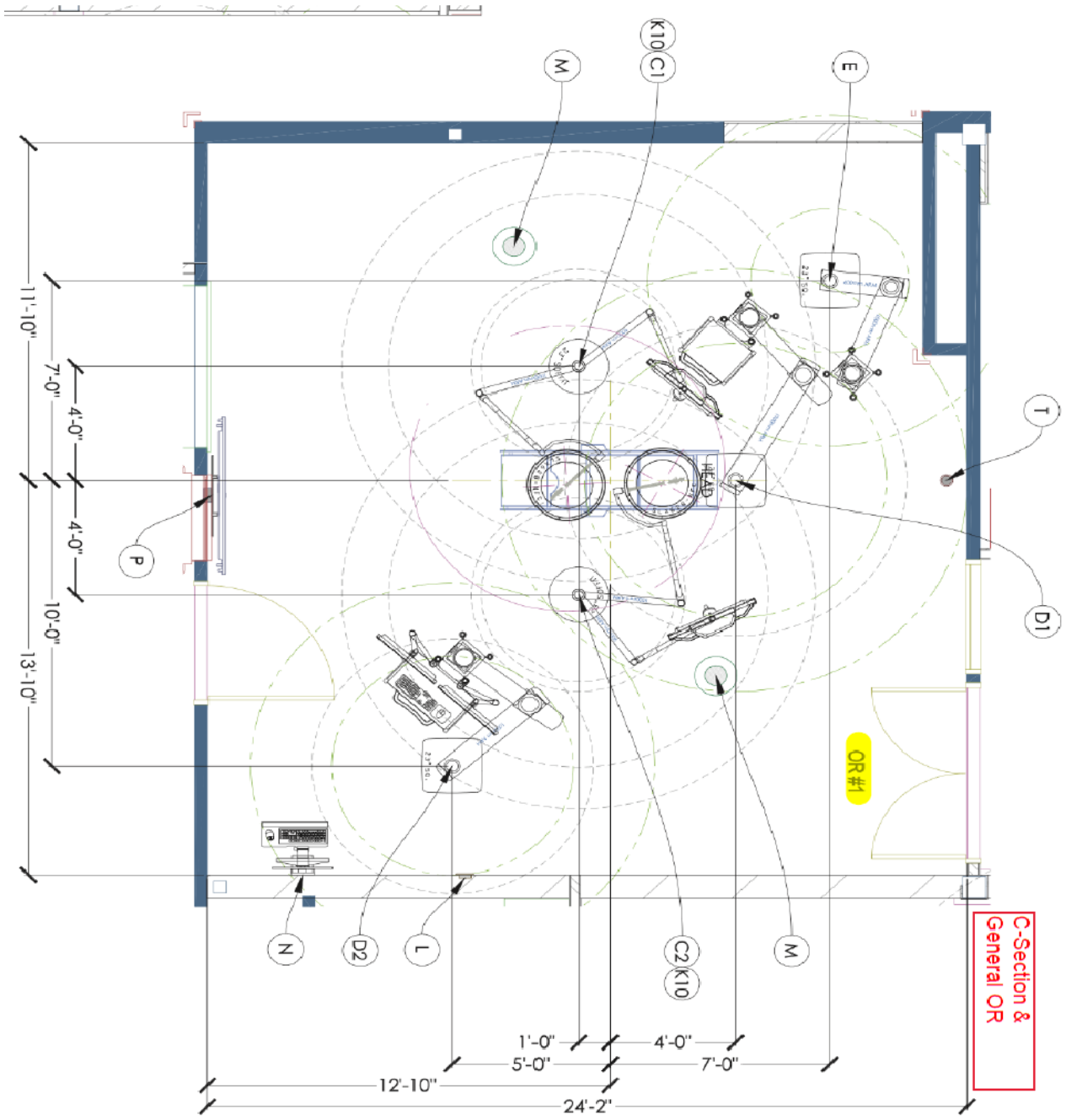

901 Montgomery Street
Decorah, IA 52101

PHONE 563-382-2911
FAX 563-387-3102

OR 1 - SLX Light with UDM

Quote:10179648 Rev:4 Block#:12

stryker

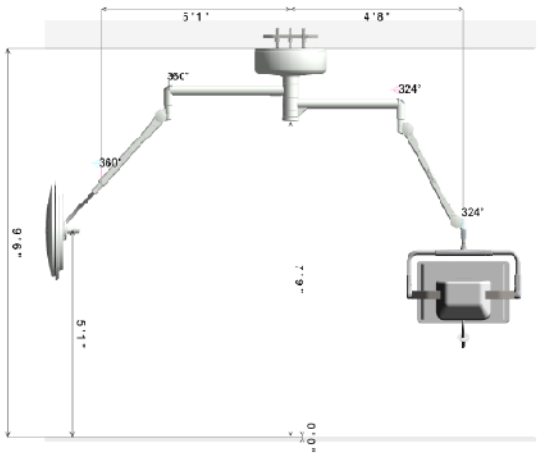

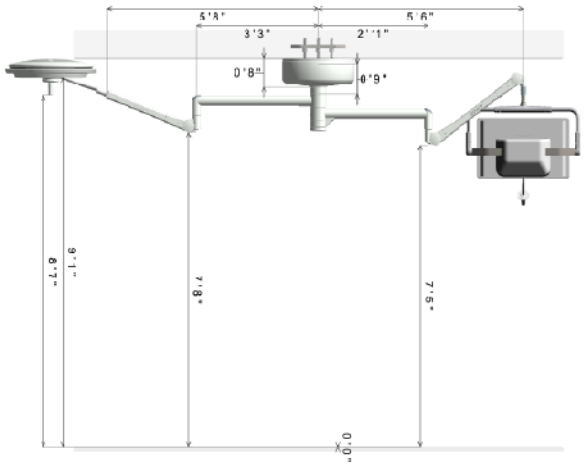

Main Mount	
Mounting Plate Type	Single Common Plate
Ceiling Cover	CB 5423004
Tube Length	230
Electronics in SK Box	No
Camera Type	None
Central Endo Lite	No
Light Handle Type	Berchtold
First Configuration?	No

Arm No.1 (MP1)	
Equipment	SLX628
Horizontal Arm	1000
HCT Length	None
Cardanic	NFC
Dual Control	No
Mains Voltage	120VAC

Arm No.2 (MP2)	
Equipment	UDM (19" - 32")
Horizontal Arm	900
HCT Length	None
Dual Control	No
First Monitor	UDM (19" - 32")
Video Bundle	StrykerUDM

I confirm the ceiling height and agree with the dimensions as drawn. I confirm the equipment configuration as shown including arm lengths, platforms, gas key styles, brand, and locations; electronic, and low voltage selections and locations. I understand that any changes made after an order is in production will result in a change order fee and a delay in shipment.

CUSTOMER APPROVALS	SIGNATURE	PRINT NAME & TITLE	DATE
CLINICAL REPRESENTATIVE			
FACILITY ENGINEERING			

NOTES:

1. For weights, moments, and installation details, please refer to the Stryker Pre-installation manuals.
2. It is the owners responsibility to provide the support structure to meet requirements listed in the Pre-install Manual.

Stryker Communications
571 Silveron Blvd.
Flower Mound, TX 75028
PHONE: (877) 769-8106
E-FAX: (408) 754-2969
www.stryker.com

Sales Representative :
Brian Klipfel
brian.klipfel@stryker.com

Project	
Customer: WINNESHIEK MED CTR	
City: DECORAH	State: Iowa
Equip ID: F 628/SFP	
Group Name: OR 1	
Quote No.: 10179648	Quote Rev No.: 4
Quote Date: 15-Aug-2023	QTY: 1
Oracle Line #	
DWG Rev No.: 3	Block #: 12
DWG No.: 10179648C003	

WinnMed

PHONE 563-382-2911
FAX 563-387-3102

901 Montgomery Street
Decorah, IA 52101

WinnMed

Room: OR 1

SLX Light with UDM

PART #	DESCRIPTION	QTY	LIST PRICE	EXT LIST PRICE
FD 2203	LIGHT / SFP1	1	[redacted]	

Mounting Details

Mounting Plate Single Common Plate
Multiple Suspension Mounting None
Ceiling Cover CB 5423004 590x197 TD 125mm
Drop Tube Length 230

Controls

Wall Control Wall mounted (recessed)
Cardanic Control No
Control Unit Type Touch
Light Handle Type Sterile Control+ (Devon slip on)

Power Supply

SK Box Above Ceiling or Surface Mount

Configuration Details

Arm 1 Lighthead
Arm Length 1000
Cardanic Style NFC
Camera Prep No

Arm 2 Monitor bracket
Arm Length 900

PART #	DESCRIPTION	QTY	LIST PRICE	EXT LIST PRICE
CY 9000150	LIGHT OR FLAT PANEL HANDLE	1	[redacted]	
CY 9000103	UDM INTERSTITIAL AND SUSPENSION CABLES	1		
CY 1008104	MULTI COLOR TOUCH WALL CONTROL DISPLAY FOR S NGLE, DUAL OR TRIPLE F-GENERATION LIGHT CONFIGURATION	1		
CY 9000122	STERILE CONTROL PREP	1		
CY 9000123	STERILE CONTROL+ LIGHT HANDLE	1		
Configuration Total:			[redacted]	

901 Montgomery Street
Decorah, IA 52101

PHONE 563-382-2911
FAX 563-387-3102

WinnMed

WinnMed **Issue Date:** **3/6/2024**
Expansion and Renovation
Decorah, IA 52101
Furniture Specifications

CONTACT: Ben Stevens - CFO
PHONE NUMBER: 563-387-3109

ITEM NUMBER:	30

ITEM NAME:	OR 1 Ceiling Mounted Anesthesia Boom		
ROOM NUMBER:		**QUANTITY:**	

SPECIFICATION INFORMATION

MANUFACTURER: Stryker
MODEL #: SFS-2
DIMENSIONS: OR 1
DESCRIPTION: OR 1 Ceiling Mounted Anesthesia Boom; 2 Row, 2 Arm, 1 Air, 2 Vac, 1 N2O Gas, 2 O2, 1 WAGD Gas

FURNITURE & EQUIPMENT IMAGE

WinnMed

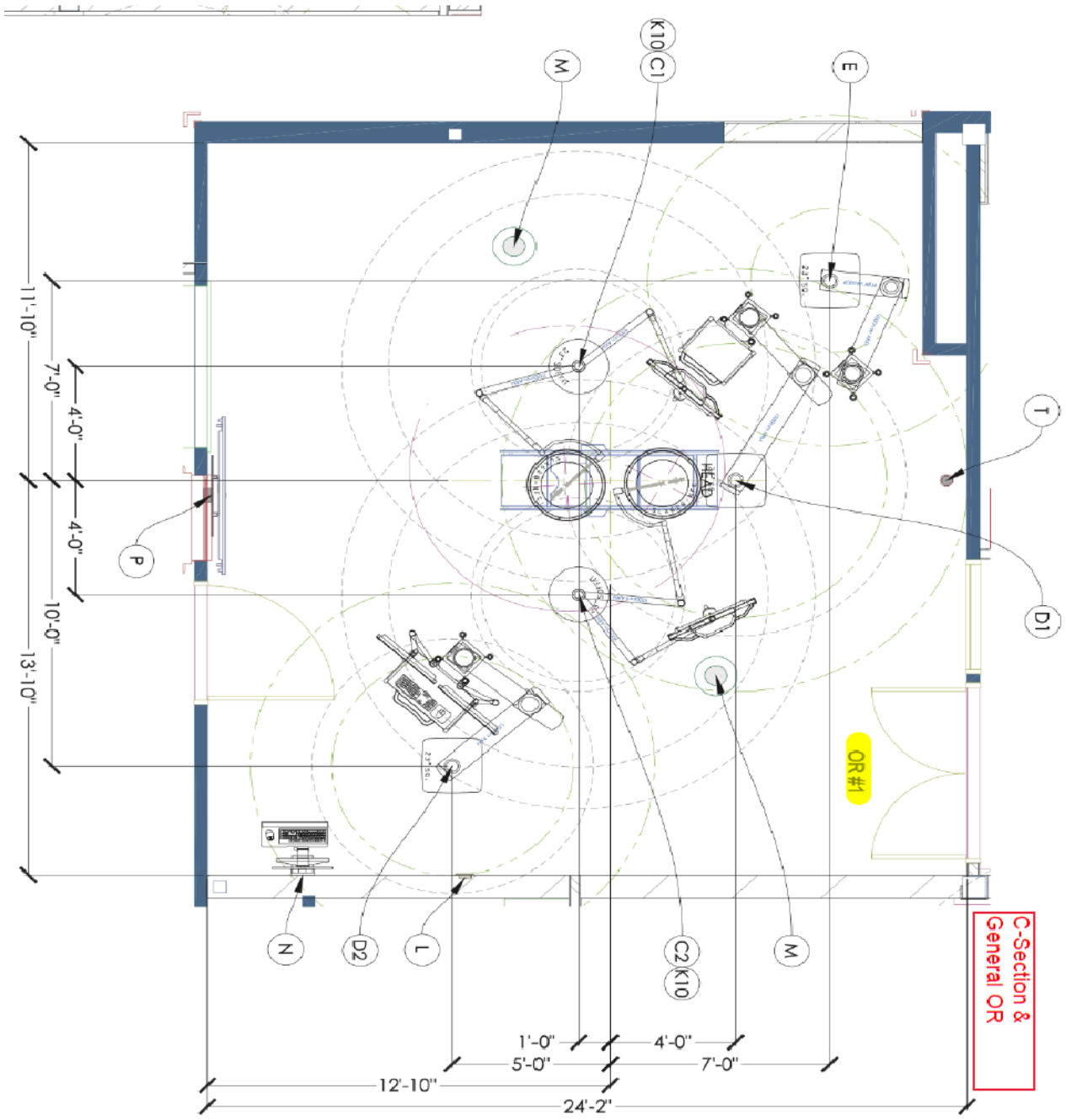

901 Montgomery Street
Decorah, IA 52101

PHONE 563-382-2911
FAX 563-387-3102

OR 1 - Anesthesia Boom

Quote:10179648 Rev 4 Block# 17

stryker

9' 6"

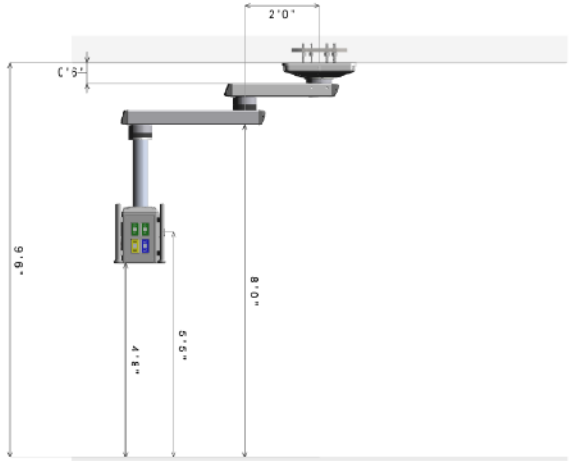

Suspension	
Brake System	Electric
Medical Rail Type	Fairfield
Top Arm Length	600mm
Bottom Arm Length	850mm
Column Tube Length	550mm
Weight Capacity (see note 4)	500 lbs.
Total Throat Used (%)	53
Gas Hose Length (ft)	12.12
Packaging Type	Stand Up
Manufacturing Notes	Assemble All MFR's

I confirm the ceiling height and agree with the dimensions as drawn. I confirm the equipment configuration as shown including arm lengths, platforms, gas key styles, brand, and locations, electronic, and low voltage selections and locations. I understand that any changes made after an order is in production will result in a change order fee and a delay in shipment.

CUSTOMER APPROVALS	SIGNATURE	PRINT NAME & TITLE	DATE
CLINICAL REPRESENTATIVE			
FACILITY ENGINEERING			

NOTES:

1. For weights, moments, and installation details, please refer to the Stryker Pre-installation manuals.
2. It is the owners responsibility to provide the support structure to meet requirements listed in the Pre-install Manual.
3. Customer is responsible for reviewing and approving Gas Key Style and Manufacturer.
4. Total weight capacity available for all Stryker and customer supplied accessories, based on weights moments listed in 3-SERIES Pre-Install Manual.
5. Bottom of Stryker mounting plate must be installed at 3.0" above finished ceiling plane. All vertical boom dimensions shown in drawing are dependent on this requirement.

Stryker Communications
571 Silveron Blvd.
Flower Mound, TX 75028
PHONE: (877) 789-8105
E-FAX: (408) 754-2969
www.stryker.com

Sales Representative :
Brian Klipfel
brian.klipfel@stryker.com

Project:	
Customer: WINMESHIEK MED CTR	
City: DECORAH	State: Iowa
Equip ID: SFS-2	
Group Name: OR 1	
Quote No.: 10179648	Quote Rev No.: 4
Quote Date: 15-Aug-2023	QTY: 1
Oracle Line #:	
DWG Rev No.: 6	Block #: 17
DWG No.: 10179648S006	

WinnMed

PHONE 563-382-2911
FAX 563-387-3102

901 Montgomery Street
Decorah, IA 52101

OR 1 - Anesthesia Boom

Quote:10179648 Rev:4 Block#:17

stryker

9' 6"

FRONT

F1	3rd Party Data Plate 1G
F2	Distribution Bd
F3	20A/125V Duplex (4 Outlets)

RIGHT

R1	O2
R2	O2
R3	Med Air
R4	N2O

BACK

B1	20A/125V Duplex (4 Outlets)
B2	COR Lite 4-in-1 Plate
B3	20A/125V-5-20R Duplex

LEFT

L1	WAGD
L2	Blank
L3	VAC
L4	VAC

Data Communications

Qty	Description
1	1G Blank Plate
2	1G Blank W/String
1	Distribution Board
1	COR Lite 4-in-1 Plate

Gas Outlets

Qty	Gas Type	Key Style	Manufacturer
2	Oxygen (O2)	Chemtron	Beacon Medaes
1	Nitrous Oxide (N2O)	Chemtron	Beacon Medaes
1	Medical Air	Chemtron	Beacon Medaes
2	Vacuum	Chemtron	Beacon Medaes
1	WAGD	Chemtron	Beacon Medaes

High Voltage

Main Power Type	Isolated
Main Power Source	Emergency
Manufacturer	Leviton

Loc.	Circuit Ref #	# of Circuits	Color	Outlet Box	Description
F3	1	1	Red	A	20A/125V Duplex (4 Outlets)
B1	2	1	Red	A	20A/125V Duplex (4 Outlets)
B3	3	1	Red	A	20A/125V-5-20R Duplex

Circuits

Qty	Description
3	Total 15A/20A Circuits
1	Circuit for Motor and Brake

Multi-Functional Rail (MFR)

Front	406mm
Back	406mm
Control	Rear Only

I confirm the ceiling height and agree with the dimensions as drawn. I confirm the equipment configuration as shown including arm lengths, platforms, gas key styles, brand, and locations; electronic, and low voltage selections and locations. I understand that any changes made after an order is in production will result in a change order fee and a delay in shipment.

CUSTOMER APPROVALS	SIGNATURE	PRINT NAME & TITLE	DATE
CLINICAL REPRESENTATIVE			
FACILITY ENGINEERING			

NOTES:

1. For weights, moments, and installation details, please refer to the Stryker Pre-installation manuals.
2. It is the owners responsibility to provide the support structure to meet requirements listed in the Pre-install Manual.
3. Customer is responsible for reviewing and approving Gas Key Style and Manufacturer.
4. Total weight capacity available for all Stryker and customer supplied accessories, based on weights moments listed in S-SERIES Pre-Install Manual.
5. Bottom of Stryker mounting plate must be installed at 3.0" above finished ceiling plane. All vertical boom dimensions shown in drawing are dependent on this requirement.

Stryker Communications
571 Silveron Blvd.
Flower Mound, TX 75028
PHONE: (877) 789-8106
E-FAX: (408) 754-2969
www.stryker.com

Sales Representative :
Brian Klipfel
brian.klipfel@stryker.com

Project	
Customer: WINNESHIEK MED CTR	
City: DECORAH	State: Iowa
Equip ID: SFS-2	
Group Name: OR 1	
Quote No.: 10179648	Quote Rev No.: 4
Quote Date: 15-Aug-2023	QTY: 1
Oracle Line #:	
DWG Rev No.: 6	Block #: 17
DWG No.: 10179648S005	

WinnMed

PHONE 563-382-2911
FAX 563-387-3102

901 Montgomery Street
Decorah, IA 52101

WinnMed

Room: OR 1

Anesthesia Boom

S-Series Standard Equipment Management System

Introducing a new standard in equipment management. With a completely redesigned user interface and a compact, fully customizable system, it has never been easier to manage your services and maneuver your equipment.

PART #	DESCRIPTION	QTY	LIST PRICE	EXT LIST PRICE
SFS-2	S-SERIES, STANDARD FIXED, 2 ROW, 2 ARM	1		

Mounting Details
- Mounting Plate: Single Common Plate
- Ceiling Cover: Standalone
- Brake System: Electric

MFR Configuration
- Front MFR Length: 406mm
- Rear MFR Length: 406mm
- MFR Controls: Rear Only

Shelves
- Shelves: 0

High Voltage Services
- 20A/125V-5-20R Duplex: 1
- 20A/125V Duplex (4 Outlets): 2

Low Voltage Services
- Blank Plate: 1
- 3rd Party Data Plate 1G Plate: 1
- Distribution Bd Plate: 1
- COR Lite 4-in-1 Plate: 1

Additional Cables

Gas Services
- Gas Manufacturer: Beacon Medaes
- Gas Fitting Type: Chemetron
- Air Gas: 1
- Vac Gas: 2
- N2O Gas: 1
- O2 Gas: 2
- WAGD Gas: 1

Configuration Total:

901 Montgomery Street
Decorah, IA 52101

PHONE 563-382-2911
FAX 563-387-3102

WinnMed

WinnMed **Issue Date:** **3/6/2024**
Expansion and Renovation
Decorah, IA 52101
Furniture Specifications

CONTACT: Ben Stevens - CFO
PHONE NUMBER: 563-387-3109

ITEM NUMBER:	31

ITEM NAME:	OR 1 Ceiling Mounted Equipment Boom		
ROOM NUMBER:		**QUANTITY:**	

SPECIFICATION INFORMATION

MANUFACTURER: Stryker
MODEL #: SPS-3-C
DIMENSIONS: OR 1
DESCRIPTION: Ceiling Mounted Equipment Management System; 3 Row, 4 Shelves; Foot Pedal Storage Drawer

FURNITURE & EQUIPMENT IMAGE

901 Montgomery Street
Decorah, IA 52101

PHONE 563-382-2911
FAX 563-387-3102

WinnMed

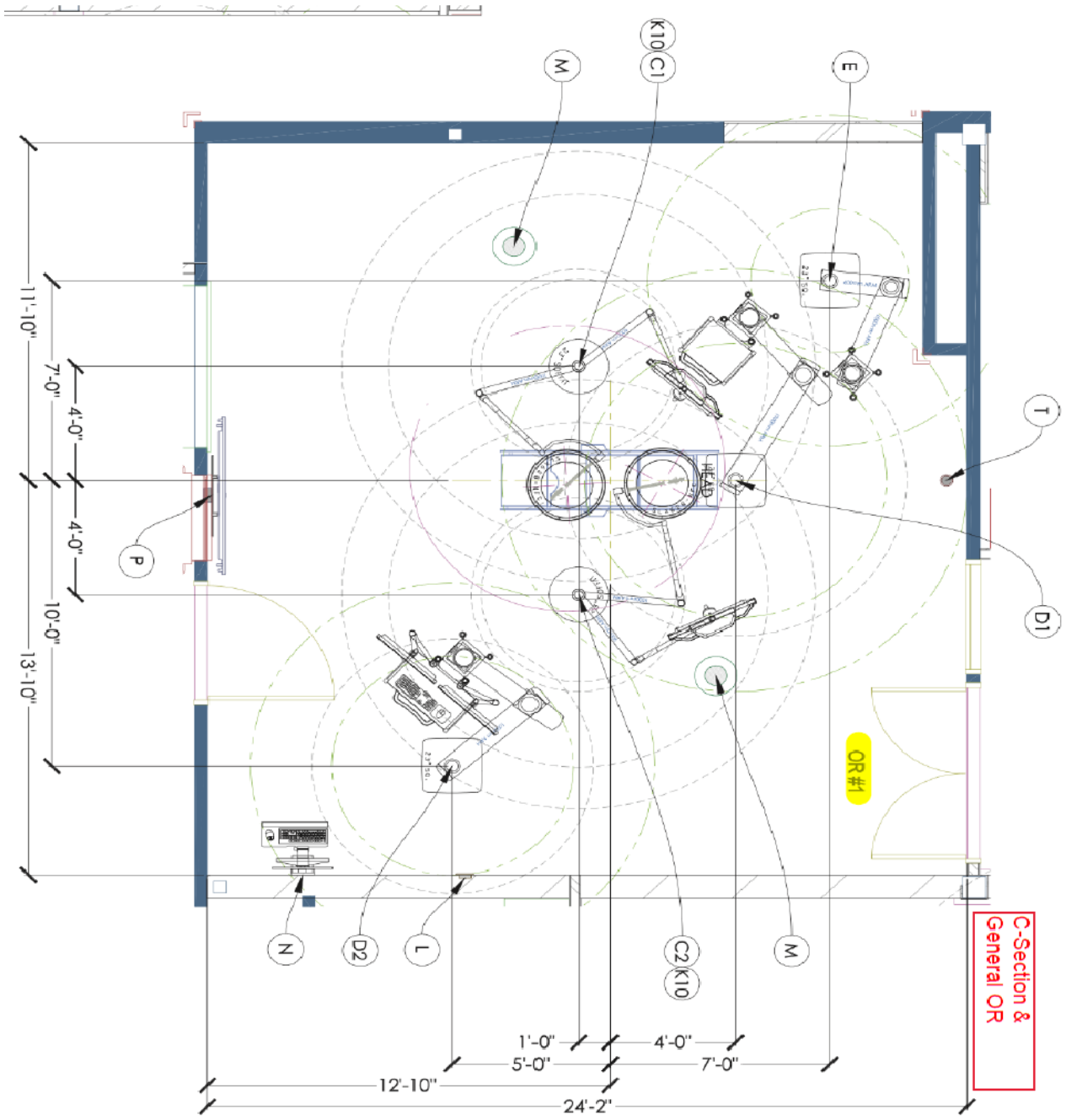

901 Montgomery Street
Decorah, IA 52101

PHONE 563-382-2911
FAX 563-387-3102

WinnMed

stryker

ORs 1 - Equipment Boom

Quote:10179648 Rev:4 Block#:20

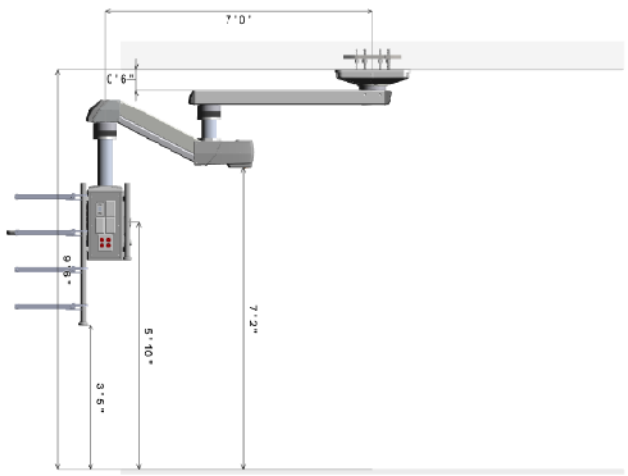

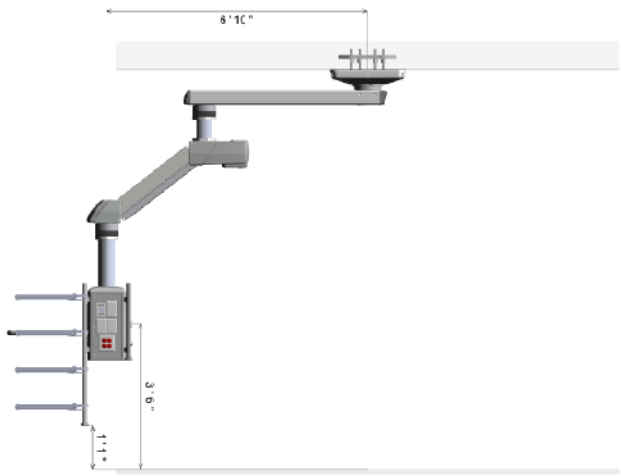

Suspension	
Brake System	Electric
Medical Rail Type	Fairfield
Top Arm Length	1300mm
Bottom Arm Length	900mm
Mid Tube Length	150mm
Column Tube Length	400mm
Weight Capacity (see note 4)	267 lbs.
Total Throat Used (%)	44
Gas Hose Length (ft)	15.28
Packaging Type	Stand Up
Manufacturing Notes	Do Not Assemble Front MFR

S-Series Equipment Boom Shelves	
Rail Type	Fairfield
Shelf 1	S15mm
Shelf 2	S15mm w/Controls
Shelf 3	S15mm
Shelf 4	S15mm

I confirm the ceiling height and agree with the dimensions as drawn. I confirm the equipment configuration as shown including arm lengths, platforms, gas key styles, brand, and locations; electronic, and low voltage selections and locations. I understand that any changes made after an order is in production will result in a change order fee and a delay in shipment.

CUSTOMER APPROVALS	SIGNATURE	PRINT NAME & TITLE	DATE
CLINICAL REPRESENTATIVE			
FACILITY ENGINEERING			

NOTES:

1. For weights, moments, and installation details, please refer to the Stryker Pre-installaton manuals.
2. It is the owners responsibility to provide the support structure to meet requirements listed in the Pre-install Manual.
3. Customer is responsible for reviewing and approving Gas Key Style and Manufacturer.
4. Total weight capacity available for all Stryker and customer supplied accessories, based on weights moments listed in S-SERIES Pre-Install Manual.
5. Bottom of Stryker mounting plate must be installed at 3.0" above finished ceiling plane. All vertical boom dimensions shown in drawing are dependent on this requirement.

Stryker Communications
571 Silveron Blvd.
Flower Mound, TX 75028
PHONE: (877) 789-8106
E-FAX: (469) 754-2969
www.stryker.com

Sales Representative :
Brian Klipfel
brian.klipfel@stryker.com

Project:	
Customer: WINNESHIEK MED CTR	
City: DECORAH	State: Iowa
Equip ID: SPS-3	
Group Name: ORs 1	
Quote No.: 10179648	Quote Rev No.: 4
Quote Date: 15-Aug-2023	QTY: 1
Oracle Line #:	
DWG Rev No.: 3	Block #: 20
DWG No.: 10179648S008	

PHONE 563-382-2911
FAX 563-387-3102

901 Montgomery Street
Decorah, IA 52101

ORs 1 - Equipment Boom

Quote:10179648 Rev:4 Block#:20

stryker

9'6"

FRONT

F1	20A/125V Duplex (8 Outlets)
F2	Distribution Bd
F3	COR Lite Endo Camera

RIGHT

R1	CO2
R2	Blank
R3	Blank
R4	Blank
R5	20A/125V Duplex (4 Outlets)

BACK

B1	COR Lite 4-in-1 Plate
B2	Blank
B3	Blank
B4	Blank
B5	Instr Air Regulator

LEFT

L1	20A/125V Duplex (4 Outlets)
L2	Blank
L3	Blank
L4	VAC
L5	VAC

Data Communications

Qty	Description
8	1G Blank Plate
1	1G Blank W/String
1	Distribution Board
1	COR Lite Endo Camera
1	COR Lite 4-in-1 Plate

Gas Outlets

Qty	Gas Type	Key Style	Manufacturer
1	Instrument Air Regulator	D.I.S.S.	AMICO
1	Carbon Dioxide (CO2)	D.I.S.S.	Beacon Medaes
2	Vacuum	Chemtron	Beacon Medaes

High Voltage

Main Power Type	Isolated
Main Power Source	Emergency
Manufacturer	Leviton

Loc	Circuit Ref#	# of Circuits	Color	Outlet Box	Description
F1	1,2	2	Red	A	20A/125V Duplex (8 Outlets)
R5	3	1	Red	A	20A/125V Duplex (4 Outlets)
L1	4	1	Red	A	20A/125V Duplex (4 Outlets)

Circuits

Qty	Description
4	Total 15A/20A Circuits
1	Circuit for Motor and Brake

Mult-Functional Rail (MFR)

Front	1000mm
Back	531mm
Control	Rear Only

I confirm the ceiling height and agree with the dimensions as drawn. I confirm the equipment configuration as shown including arm lengths, platforms, gas key styles, brand, and locations; electronic, and low voltage selections and locations. I understand that any changes made after an order is in production will result in a change order fee and a delay in shipment.

CUSTOMER APPROVALS	SIGNATURE	PRINT NAME & TITLE	DATE
CLINICAL REPRESENTATIVE			
FACILITY ENGINEERING			

NOTES:

1. For weights, moments, and installation details, please refer to the Stryker Pre-installation manuals.
2. It is the owners responsibility to provide the support structure to meet requirements listed in the Pre-Install Manual.
3. Customer is responsible for reviewing and approving Gas Key Style and Manufacturer.
4. Total weight capacity available for all Stryker and customer supplied accessories, based on weights moments listed in S-SERIES Pre-Install Manual.
5. Bottom of Stryker mounting plate must be installed at 3.0" above finished ceiling plane. All vertical boom dimensions shown in drawing are dependent on this requirement.

Stryker Communications
571 Silveron Blvd.
Flower Mound TX 75028
PHONE: (877) 789-8106
E-FAX: (408) 754-2969
www.stryker.com

Sales Representative :
Brian Klipfel
brian.klipfel@stryker.com

Project:	
Customer: WINNESHIEK MED CTR	
City: DECORAH	State: Iowa
Equip ID: SPS-3	
Group Name: ORs 1	
Quote No.: 10179648	Quote Rev No.: 4
Quote Date: 15-Aug-2023	QTY: 1
Oracle Line #:	
DWG Rev No.: 3	Block #: 20
DWG No.: 10179648S008	

WinnMed

901 Montgomery Street
Decorah, IA 52101

PHONE 563-382-2911
FAX 563-387-3102

WinnMed

Room: ORs 1 3 4

Equipment Boom

S-Series Standard Equipment Management System

Introducing a new standard in equipment management. With a completely redesigned user interface and a compact, fully customizable system, it has never been easier to manage your services and maneuver your equipment.

PART #	DESCRIPTION	QTY	LIST PRICE	EXT LIST PRICE
SPS-3	S-SERIES, STANDARD POWERED, 3 ROW, 2 A	3	[redacted]	

Mounting Details
- Mounting Plate: Single Common Plate
- Ceiling Cover: Standalone
- Brake System: Electric

MFR Configuration
- Front MFR Length: 1000mm
- Rear MFR Length: 531mm
- MFR Controls: Rear Only

Shelves
- Shelves: 4
- Shelf Rail Type: Fairfield
- Shelf 1: 515mm
- Shelf 2: 515mm w/Controls
- Shelf 3: 515mm
- Shelf 4: 515mm

High Voltage Services
- 20A/125V Duplex (8 Outlets): 1
- 20A/125V Duplex (4 Outlets): 2

Low Voltage Services
- Blank Plate: 8
- Distribution Bd Plate: 1
- COR Lite 4-in-1 Plate: 1
- COR Lite Endo Camera Plate: 1

Additional Cables

Gas Services
- Gas Manufacturer: Beacon Medaes
- Gas Fitting Type: Chemetron
- C02 Gas: 1
- Vac Gas: 2
- Instrument Air Gas: 1

PART #	DESCRIPTION	QTY	LIST PRICE	EXT LIST PRICE
P40074	ASM, HANDLE AND SHELF WITH FAIRF ELD R	3	[redacted]	
P36143	ASM, SHELF MOUNT HDW	12		
P40237	ASM, SHELF WITH FA RFIELD RA LS, 515,	9		
P34414	KIT, FOOT PEDAL STORAGE DRAWER, ATLAS	3		
Configuration Total:				

901 Montgomery Street
Decorah, IA 52101

PHONE 563-382-2911
FAX 563-387-3102

WinnMed

WinnMed **Issue Date:** **3/6/2024**
Expansion and Renovation
Decorah, IA 52101
Furniture Specifications

CONTACT: Ben Stevens - CFO
PHONE NUMBER: 563-387-3109

ITEM NUMBER:	32

ITEM NAME:	OR 3 Ceiling Mounted Equipment Boom		
ROOM NUMBER:		**QUANTITY:**	

SPECIFICATION INFORMATION

MANUFACTURER: Stryker
MODEL #: SPS-3-C
DIMENSIONS: OR 3
DESCRIPTION: Ceiling Mounted Equipment Management System; 3 Row, 4 Shelves; Foot Pedal Storage Drawer

FURNITURE & EQUIPMENT IMAGE

901 Montgomery Street
Decorah, IA 52101

PHONE 563-382-2911
FAX 563-387-3102

WinnMed

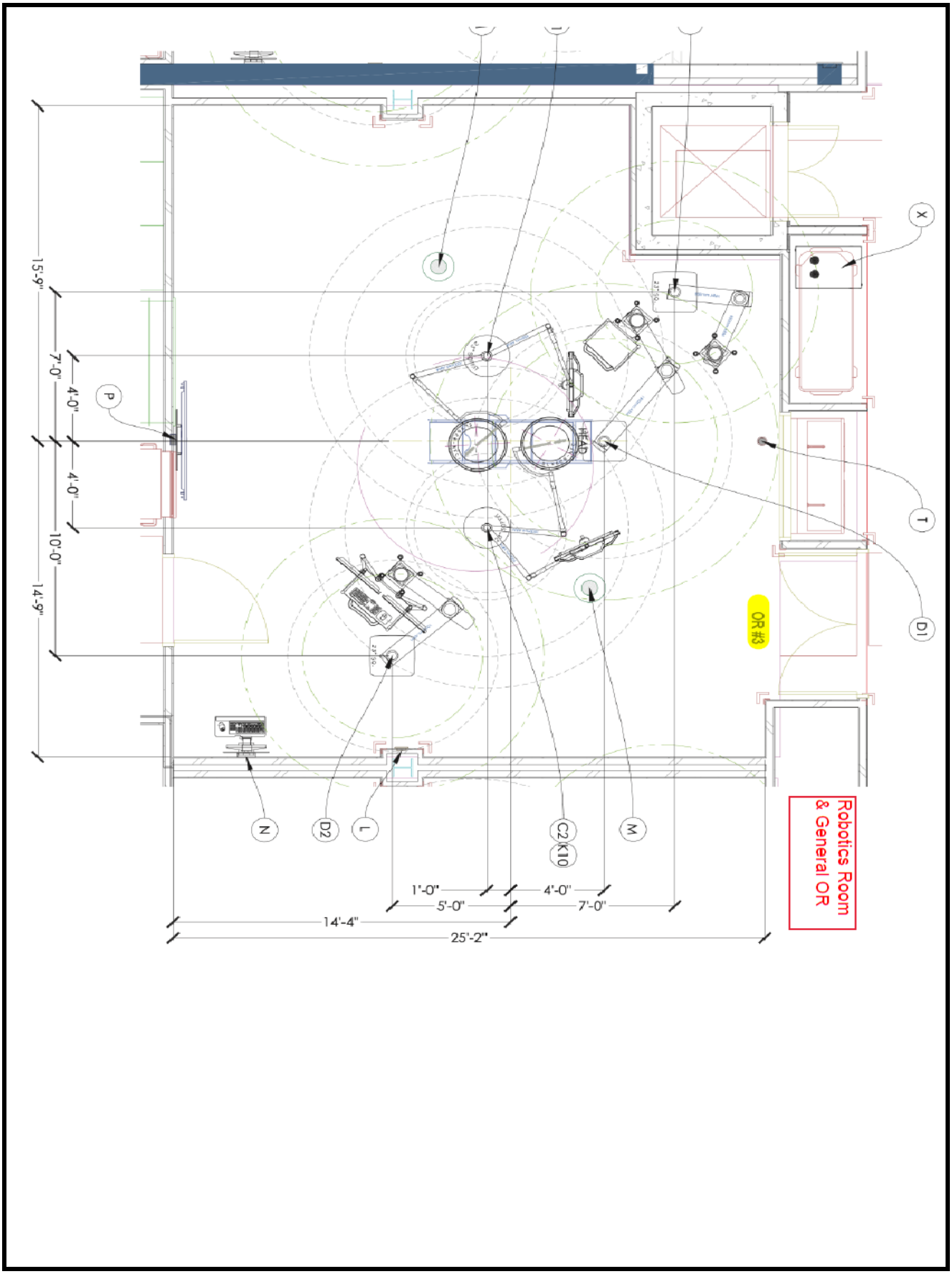

901 Montgomery Street
Decorah, IA 52101

PHONE 563-382-2911
FAX 563-387-3102

WinnMed

stryker

ORs 1 - Equipment Boom

Quote:10179648 Rev:4 Block#:20

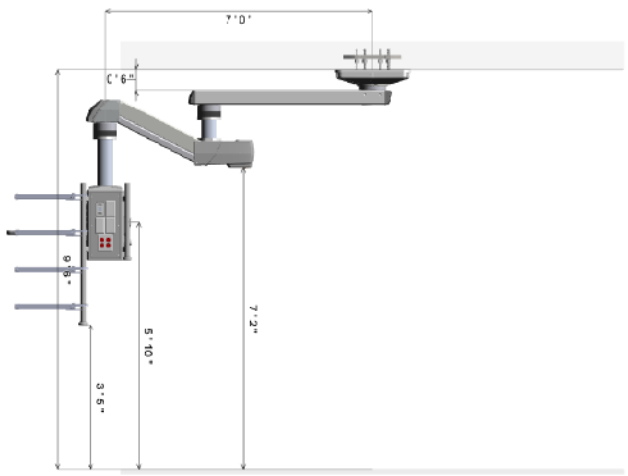

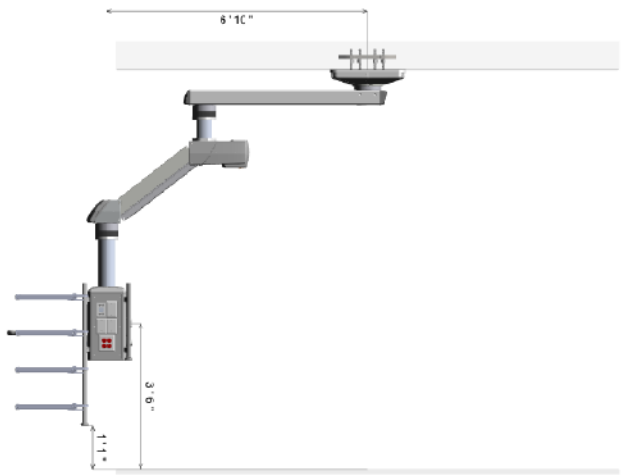

Suspension	
Brake System	Electric
Medical Rail Type	Fairfield
Top Arm Length	1300mm
Bottom Arm Length	900mm
Mid Tube Length	150mm
Column Tube Length	400mm
Weight Capacity (see note 4)	267 lbs.
Total Throat Used (%)	44
Gas Hose Length (ft)	15.28
Packaging Type	Stand Up
Manufacturing Notes	Do Not Assemble Front MFR

S-Series Equipment Boom Shelves	
Rail Type	Fairfield
Shelf 1	S15mm
Shelf 2	S15mm w/Controls
Shelf 3	S15mm
Shelf 4	S15mm

I confirm the ceiling height and agree with the dimensions as drawn. I confirm the equipment configuration as shown including arm lengths, platforms, gas key styles, brand, and locations; electronic, and low voltage selections and locations. I understand that any changes made after an order is in production will result in a change order fee and a delay in shipment.

CUSTOMER APPROVALS	SIGNATURE	PRINT NAME & TITLE	DATE
CLINICAL REPRESENTATIVE			
FACILITY ENGINEERING			

NOTES:

1. For weights, moments, and installation details, please refer to the Stryker Pre-installaton manuals.
2. It is the owners responsibility to provide the support structure to meet requirements listed in the Pre-install Manual.
3. Customer is responsible for reviewing and approving Gas Key Style and Manufacturer.
4. Total weight capacity available for all Stryker and customer supplied accessories, based on weights moments listed in S-SERIES Pre-Install Manual.
5. Bottom of Stryker mounting plate must be installed at 3.0" above finished ceiling plane. All vertical boom dimensions shown in drawing are dependent on this requirement.

Stryker Communications
571 Silveron Blvd.
Flower Mound, TX 75028
PHONE: (877) 789-8106
E-FAX: (469) 754-2969
www.stryker.com

Sales Representative :
Brian Klipfel
brian.klipfel@stryker.com

Project:	
Customer: WINNESHIEK MED CTR	
City: DECORAH	State: Iowa
Equip ID: SPS-3	
Group Name: ORs 1	
Quote No.: 10179648	Quote Rev No.: 4
Quote Date: 15-Aug-2023	QTY: 1
Oracle Line #:	
DWG Rev No.: 3	Block #: 20
DWG No.: 10179648S008	

PHONE 563-382-2911
FAX 563-387-3102

901 Montgomery Street
Decorah, IA 52101

ORs 1 - Equipment Boom

Quote:10179648 Rev:4 Block#:20

stryker

9'6"

FRONT

F1	20A/125V Duplex (8 Outlets)
F2	Distribution Bd
F3	COR Lite Endo Camera

RIGHT

R1	CO2
R2	Blank
R3	Blank
R4	Blank
R5	20A/125V Duplex (4 Outlets)

BACK

B1	COR Lite 4-in-1 Plate
B2	Blank
B3	Blank
B4	Blank
B5	Instr Air Regulator

LEFT

L1	20A/125V Duplex (4 Outlets)
L2	Blank
L3	Blank
L4	VAC
L5	VAC

Data Communications

Qty	Description
8	1G Blank Plate
1	1G Blank W/String
1	Distribution Board
1	COR Lite Endo Camera
1	COR Lite 4-in-1 Plate

Gas Outlets

Qty	Gas Type	Key Style	Manufacturer
1	Instrument Air Regulator	D.I.S.S.	AMICO
1	Carbon Dioxide (CO2)	D.I.S.S.	Beacon Medaes
2	Vacuum	Chemtron	Beacon Medaes

High Voltage

Main Power Type	Isolated
Main Power Source	Emergency
Manufacturer	Leviton

Loc	Circuit Ref#	# of Circuits	Color	Outlet Box	Description
F1	1,2	2	Red	A	20A/125V Duplex (8 Outlets)
R5	3	1	Red	A	20A/125V Duplex (4 Outlets)
L1	4	1	Red	A	20A/125V Duplex (4 Outlets)

Circuits

Qty	Description
4	Total 15A/20A Circuits
1	Circuit for Motor and Brake

Mult-Functional Rail (MFR)

Front	1000mm
Back	531mm
Control	Rear Only

I confirm the ceiling height and agree with the dimensions as drawn. I confirm the equipment configuration as shown including arm lengths, platforms, gas key styles, brand, and locations; electronic, and low voltage selections and locations. I understand that any changes made after an order is in production will result in a change order fee and a delay in shipment.

CUSTOMER APPROVALS	SIGNATURE	PRINT NAME & TITLE	DATE
CLINICAL REPRESENTATIVE			
FACILITY ENGINEERING			

NOTES:

1. For weights, moments, and installation details, please refer to the Stryker Pre-installation manuals.
2. It is the owners responsibility to provide the support structure to meet requirements listed in the Pre-Install Manual.
3. Customer is responsible for reviewing and approving Gas Key Style and Manufacturer.
4. Total weight capacity available for all Stryker and customer supplied accessories, based on weights moments listed in S-SERIES Pre-Install Manual.
5. Bottom of Stryker mounting plate must be installed at 3.0" above finished ceiling plane. All vertical boom dimensions shown in drawing are dependent on this requirement.

Stryker Communications
571 Silveron Blvd.
Flower Mound TX 75028
PHONE: (877) 789-8106
E-FAX: (408) 754-2969
www.stryker.com

Sales Representative :
Brian Klipfel
brian.klipfel@stryker.com

Project:	
Customer: WINNESHIEK MED CTR	
City: DECORAH	State: Iowa
Equip ID: SPS-3	
Group Name: ORs 1	
Quote No.: 10179648	Quote Rev No.: 4
Quote Date: 15-Aug-2023	QTY: 1
Oracle Line #:	
DWG Rev No.: 3	Block #: 20
DWG No.: 10179648S008	

WinnMed

901 Montgomery Street
Decorah, IA 52101

PHONE 563-382-2911
FAX 563-387-3102

WinnMed

Room: ORs 1 3 4

Equipment Boom

S-Series Standard Equipment Management System

Introducing a new standard in equipment management. With a completely redesigned user interface and a compact, fully customizable system, it has never been easier to manage your services and maneuver your equipment.

PART #	DESCRIPTION	QTY	LIST PRICE	EXT LIST PRICE
SPS-3	S-SERIES, STANDARD POWERED, 3 ROW, 2 A	3	[redacted]	

Mounting Details
- Mounting Plate: Single Common Plate
- Ceiling Cover: Standalone
- Brake System: Electric

MFR Configuration
- Front MFR Length: 1000mm
- Rear MFR Length: 531mm
- MFR Controls: Rear Only

Shelves
- Shelves: 4
- Shelf Rail Type: Fairfield
- Shelf 1: 515mm
- Shelf 2: 515mm w/Controls
- Shelf 3: 515mm
- Shelf 4: 515mm

High Voltage Services
- 20A/125V Duplex (8 Outlets): 1
- 20A/125V Duplex (4 Outlets): 2

Low Voltage Services
- Blank Plate: 8
- Distribution Bd Plate: 1
- COR Lite 4-in-1 Plate: 1
- COR Lite Endo Camera Plate: 1

Additional Cables

Gas Services
- Gas Manufacturer: Beacon Medaes
- Gas Fitting Type: Chemetron
- C02 Gas: 1
- Vac Gas: 2
- Instrument Air Gas: 1

PART #	DESCRIPTION	QTY	LIST PRICE	EXT LIST PRICE
P40074	ASM, HANDLE AND SHELF WITH FAIRF ELD R	3	[redacted]	
P36143	ASM, SHELF MOUNT HDW	12		
P40237	ASM, SHELF WITH FA RFIELD RA LS, 515,	9		
P34414	KIT, FOOT PEDAL STORAGE DRAWER, ATLAS	3		
Configuration Total:				

901 Montgomery Street
Decorah, IA 52101

PHONE 563-382-2911
FAX 563-387-3102

WinnMed

WinnMed **Issue Date:** **3/6/2024**
Expansion and Renovation
Decorah, IA 52101
Furniture Specifications

CONTACT: Ben Stevens - CFO
PHONE NUMBER: 563-387-3109

ITEM NUMBER:	33

ITEM NAME:	OR 4 Ceiling Mounted Equipment Boom		
ROOM NUMBER:		**QUANTITY:**	

SPECIFICATION INFORMATION

MANUFACTURER: Stryker
MODEL #: SPS-3-C
DIMENSIONS: OR 4
DESCRIPTION: Ceiling Mounted Equipment Management System; 3 Row, 4 Shelves; Foot Pedal Storage Drawer

FURNITURE & EQUIPMENT IMAGE

901 Montgomery Street
Decorah, IA 52101

PHONE 563-382-2911
FAX 563-387-3102

WinnMed

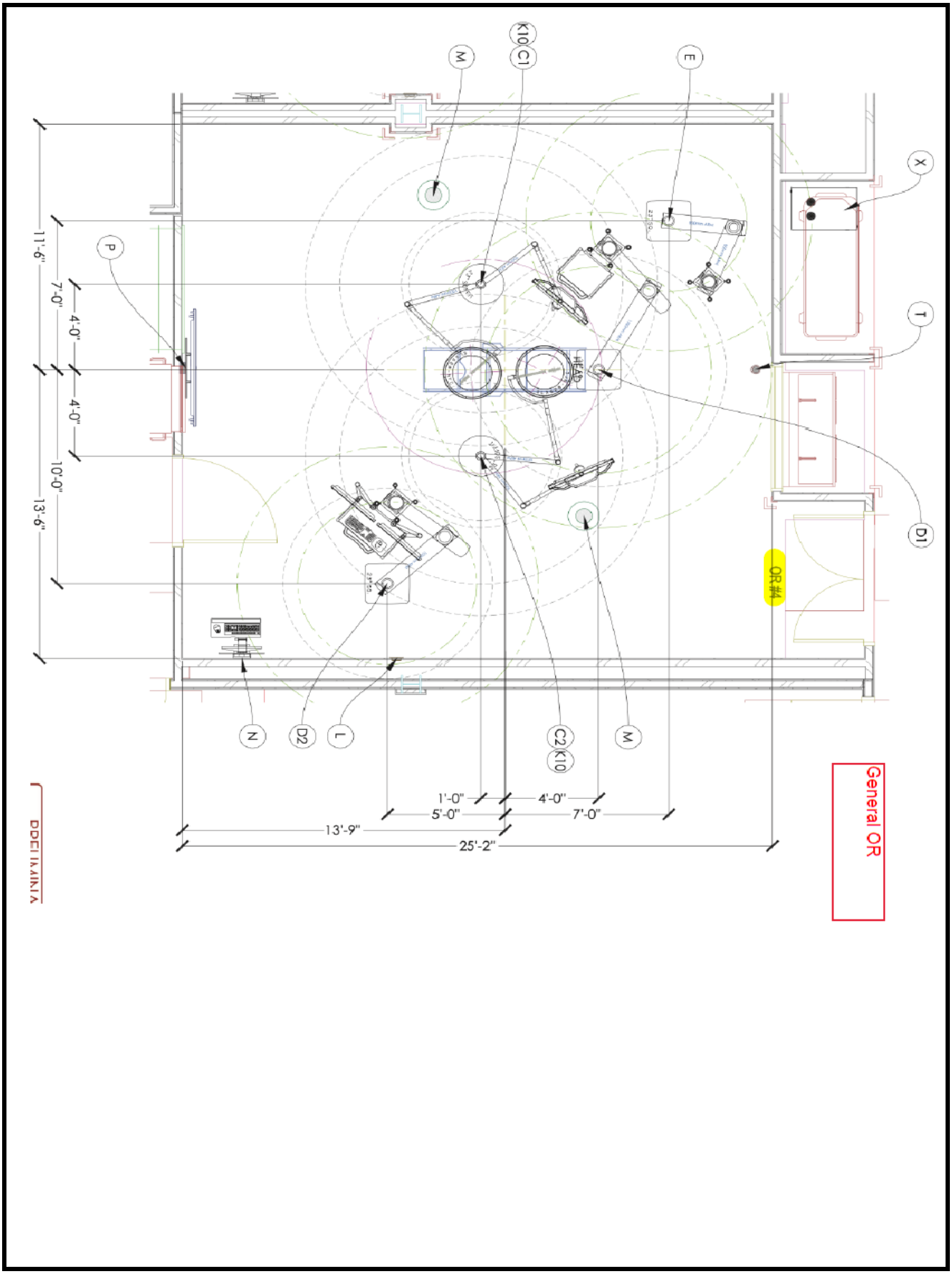

901 Montgomery Street
Decorah, IA 52101

PHONE 563-382-2911
FAX 563-387-3102

WinnMed

stryker

ORs 1 - Equipment Boom

Quote:10179648 Rev:4 Block#:20

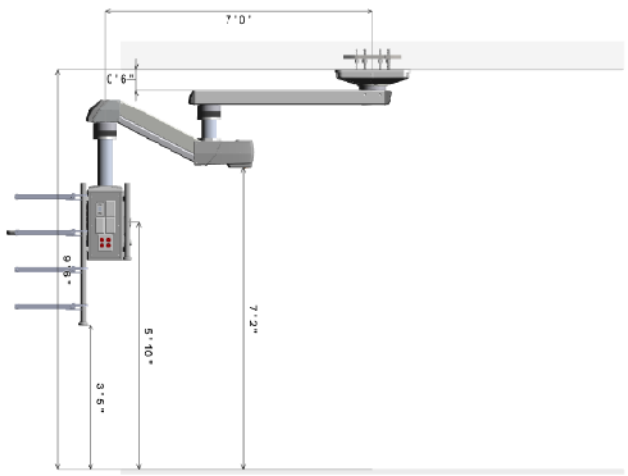

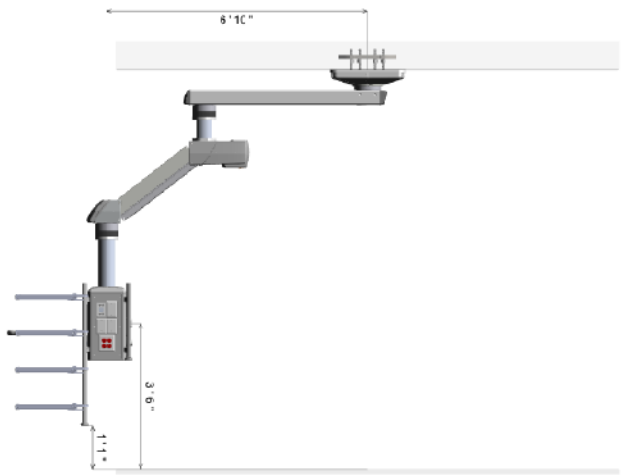

Suspension	
Brake System	Electric
Medical Rail Type	Fairfield
Top Arm Length	1300mm
Bottom Arm Length	900mm
Mid Tube Length	150mm
Column Tube Length	400mm
Weight Capacity (see note 4)	267 lbs.
Total Throat Used (%)	44
Gas Hose Length (ft)	15.28
Packaging Type	Stand Up
Manufacturing Notes	Do Not Assemble Front MFR

S-Series Equipment Boom Shelves	
Rail Type	Fairfield
Shelf 1	S15mm
Shelf 2	S15mm w/Controls
Shelf 3	S15mm
Shelf 4	S15mm

I confirm the ceiling height and agree with the dimensions as drawn. I confirm the equipment configuration as shown including arm lengths, platforms, gas key styles, brand, and locations; electronic, and low voltage selections and locations. I understand that any changes made after an order is in production will result in a change order fee and a delay in shipment.

CUSTOMER APPROVALS	SIGNATURE	PRINT NAME & TITLE	DATE
CLINICAL REPRESENTATIVE			
FACILITY ENGINEERING			

NOTES:

1. For weights, moments, and installation details, please refer to the Stryker Pre-installaton manuals.
2. It is the owners responsibility to provide the support structure to meet requirements listed in the Pre-install Manual.
3. Customer is responsible for reviewing and approving Gas Key Style and Manufacturer.
4. Total weight capacity available for all Stryker and customer supplied accessories, based on weights moments listed in S-SERIES Pre-Install Manual.
5. Bottom of Stryker mounting plate must be installed at 3.0" above finished ceiling plane. All vertical boom dimensions shown in drawing are dependent on this requirement.

Stryker Communications
571 Silveron Blvd.
Flower Mound, TX 75028
PHONE: (877) 789-8106
E-FAX: (469) 754-2969
www.stryker.com

Sales Representative :
Brian Klipfel
brian.klipfel@stryker.com

Project:	
Customer: WINNESHIEK MED CTR	
City: DECORAH	State: Iowa
Equip ID: SPS-3	
Group Name: ORs 1	
Quote No.: 10179648	Quote Rev No.: 4
Quote Date: 15-Aug-2023	QTY: 1
Oracle Line #:	
DWG Rev No.: 3	Block #: 20
DWG No.: 10179648S008	

PHONE 563-382-2911
FAX 563-387-3102

901 Montgomery Street
Decorah, IA 52101

ORs 1 - Equipment Boom

Quote:10179648 Rev:4 Block#:20

stryker

9'6"

FRONT

F1	20A/125V Duplex (8 Outlets)
F2	Distribution Bd
F3	COR Lite Endo Camera

RIGHT

R1	CO2
R2	Blank
R3	Blank
R4	Blank
R5	20A/125V Duplex (4 Outlets)

BACK

B1	COR Lite 4-in-1 Plate
B2	Blank
B3	Blank
B4	Blank
B5	Instr Air Regulator

LEFT

L1	20A/125V Duplex (4 Outlets)
L2	Blank
L3	Blank
L4	VAC
L5	VAC

Data Communications

Qty	Description
8	1G Blank Plate
1	1G Blank W/String
1	Distribution Board
1	COR Lite Endo Camera
1	COR Lite 4-in-1 Plate

Gas Outlets

Qty	Gas Type	Key Style	Manufacturer
1	Instrument Air Regulator	D.I.S.S.	AMICO
1	Carbon Dioxide (CO2)	D.I.S.S.	Beacon Medaes
2	Vacuum	Chemtron	Beacon Medaes

High Voltage

Main Power Type	Isolated
Main Power Source	Emergency
Manufacturer	Leviton

Loc	Circuit Ref#	# of Circuits	Color	Outlet Box	Description
F1	1,2	2	Red	A	20A/125V Duplex (8 Outlets)
R5	3	1	Red	A	20A/125V Duplex (4 Outlets)
L1	4	1	Red	A	20A/125V Duplex (4 Outlets)

Circuits

Qty	Description
4	Total 15A/20A Circuits
1	Circuit for Motor and Brake

Mult-Functional Rail (MFR)

Front	1000mm
Back	531mm
Control	Rear Only

I confirm the ceiling height and agree with the dimensions as drawn. I confirm the equipment configuration as shown including arm lengths, platforms, gas key styles, brand, and locations; electronic, and low voltage selections and locations. I understand that any changes made after an order is in production will result in a change order fee and a delay in shipment.

CUSTOMER APPROVALS	SIGNATURE	PRINT NAME & TITLE	DATE
CLINICAL REPRESENTATIVE			
FACILITY ENGINEERING			

NOTES:

1. For weights, moments, and installation details, please refer to the Stryker Pre-installation manuals.
2. It is the owners responsibility to provide the support structure to meet requirements listed in the Pre-Install Manual.
3. Customer is responsible for reviewing and approving Gas Key Style and Manufacturer.
4. Total weight capacity available for all Stryker and customer supplied accessories, based on weights moments listed in S-SERIES Pre-Install Manual.
5. Bottom of Stryker mounting plate must be installed at 3.0" above finished ceiling plane. All vertical boom dimensions shown in drawing are dependent on this requirement.

Stryker Communications
571 Silveron Blvd.
Flower Mound TX 75028
PHONE: (877) 789-8106
E-FAX: (408) 754-2969
www.stryker.com

Sales Representative :
Brian Klipfel
brian.klipfel@stryker.com

Project:	
Customer: WINNESHIEK MED CTR	
City: DECORAH	State: Iowa
Equip ID: SPS-3	
Group Name: ORs 1	
Quote No.: 10179648	Quote Rev No.: 4
Quote Date: 15-Aug-2023	QTY: 1
Oracle Line #:	
DWG Rev No.: 3	Block #: 20
DWG No.: 10179648S008	

WinnMed

901 Montgomery Street
Decorah, IA 52101

PHONE 563-382-2911
FAX 563-387-3102

WinnMed

Room: ORs 1 3 4

Equipment Boom

S-Series Standard Equipment Management System

Introducing a new standard in equipment management. With a completely redesigned user interface and a compact, fully customizable system, it has never been easier to manage your services and maneuver your equipment.

PART #	DESCRIPTION	QTY	LIST PRICE	EXT LIST PRICE
SPS-3	S-SERIES, STANDARD POWERED, 3 ROW, 2 A	3	[redacted]	

Mounting Details
- Mounting Plate: Single Common Plate
- Ceiling Cover: Standalone
- Brake System: Electric

MFR Configuration
- Front MFR Length: 1000mm
- Rear MFR Length: 531mm
- MFR Controls: Rear Only

Shelves
- Shelves: 4
- Shelf Rail Type: Fairfield
- Shelf 1: 515mm
- Shelf 2: 515mm w/Controls
- Shelf 3: 515mm
- Shelf 4: 515mm

High Voltage Services
- 20A/125V Duplex (8 Outlets): 1
- 20A/125V Duplex (4 Outlets): 2

Low Voltage Services
- Blank Plate: 8
- Distribution Bd Plate: 1
- COR Lite 4-in-1 Plate: 1
- COR Lite Endo Camera Plate: 1

Additional Cables

Gas Services
- Gas Manufacturer: Beacon Medaes
- Gas Fitting Type: Chemetron
- C02 Gas: 1
- Vac Gas: 2
- Instrument Air Gas: 1

PART #	DESCRIPTION	QTY	LIST PRICE	EXT LIST PRICE
P40074	ASM, HANDLE AND SHELF WITH FAIRF ELD R	3	[redacted]	
P36143	ASM, SHELF MOUNT HDW	12		
P40237	ASM, SHELF WITH FA RFIELD RA LS, 515,	9		
P34414	KIT, FOOT PEDAL STORAGE DRAWER, ATLAS	3		
Configuration Total:				

901 Montgomery Street
Decorah, IA 52101

PHONE 563-382-2911
FAX 563-387-3102

WinnMed

WinnMed **Issue Date:** **3/6/2024**
Expansion and Renovation
Decorah, IA 52101
Furniture Specifications

CONTACT: Ben Stevens - CFO
PHONE NUMBER: 563-387-3109

ITEM NUMBER:	34

ITEM NAME:	OR 1 Ceiling Mounted Nurse Station		
ROOM NUMBER:		**QUANTITY:**	

SPECIFICATION INFORMATION

MANUFACTURER: Stryker
MODEL #: SPS-2
DIMENSIONS: OR 1
DESCRIPTION: Ceiling Mounted Nurse Station; 1 Shelf

FURNITURE & EQUIPMENT IMAGE

901 Montgomery Street
Decorah, IA 52101

PHONE 563-382-2911
FAX 563-387-3102

WinnMed

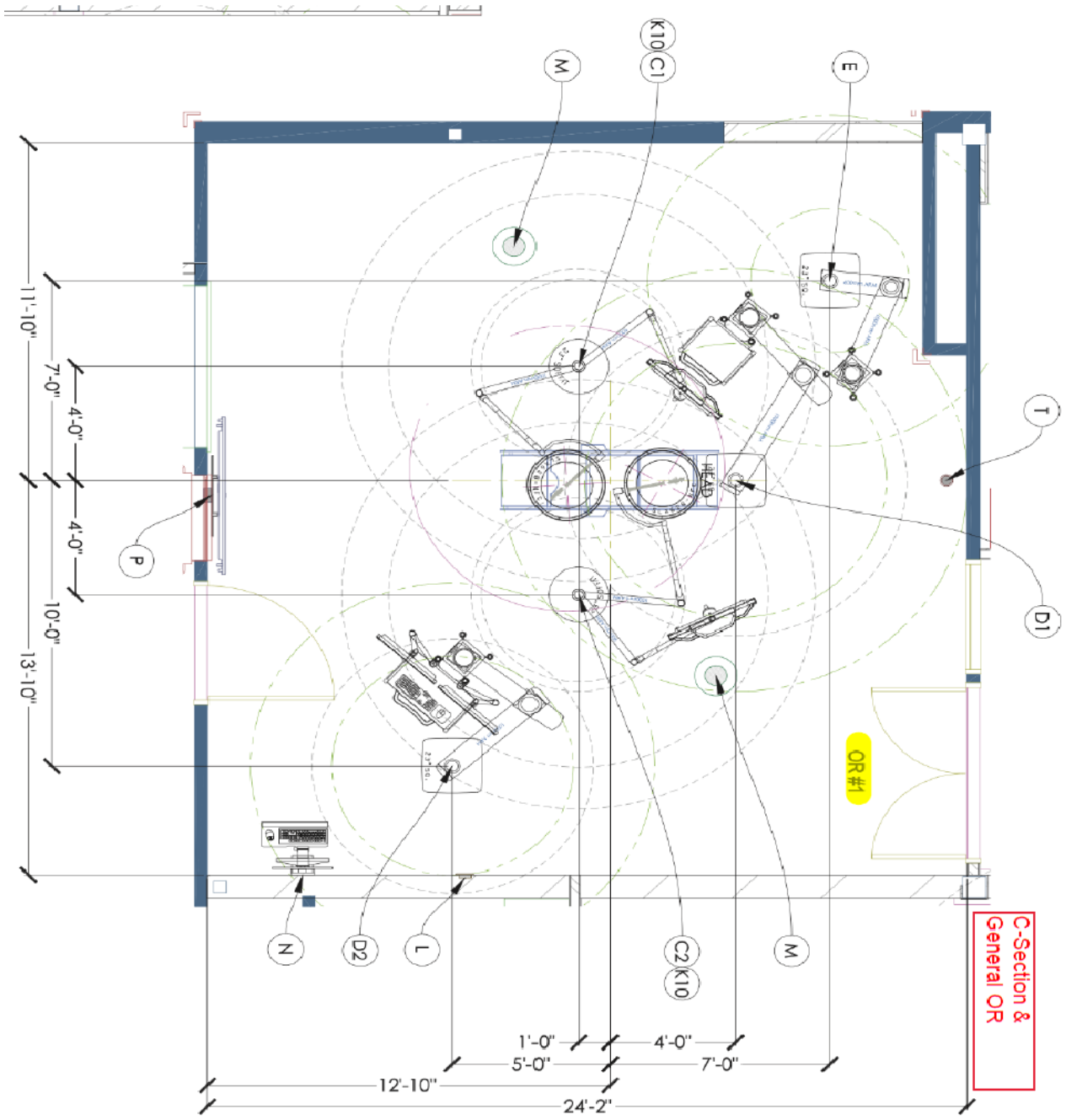

901 Montgomery Street
Decorah, IA 52101

PHONE 563-382-2911
FAX 563-387-3102

OR 1 - Nursing Boom

Quote:10179648 Rev:4 Block#:19

stryker

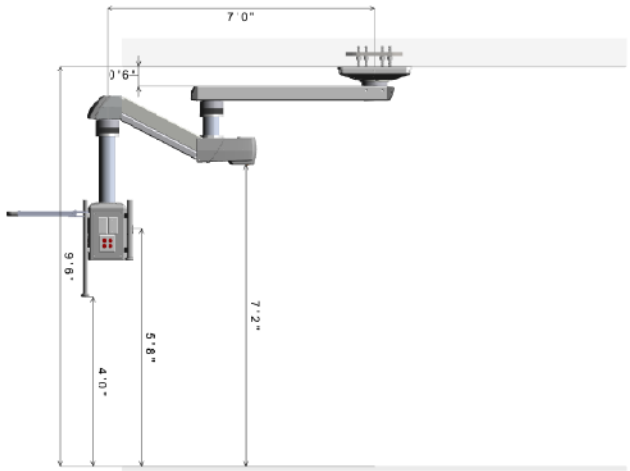

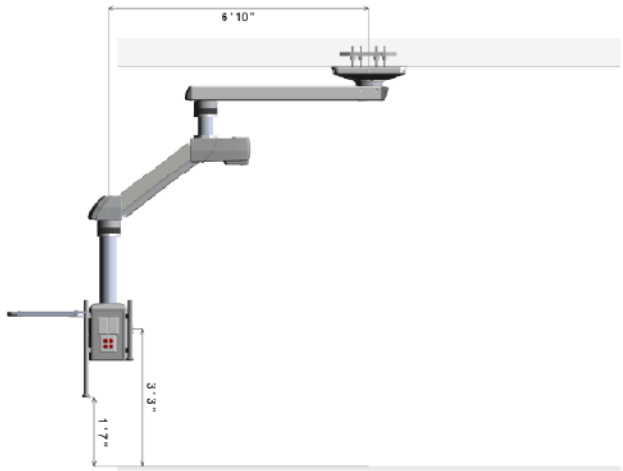

Suspension	
Brake System	Electric
Medical Rail Type	Fairfield
Top Arm Length	1300mm
Bottom Arm Length	900mm
Mid Tube Length	150mm
Column Tube Length	550mm
Weight Capacity (see note 4)	279 lbs.
Total Thrust Used (%)	29
Gas Hose Length (ft)	15.37
Packaging Type	Stand Up
Manufacturing Notes	Do Not Assemble Front MFR

S-Series Equipment Boom Shelves	
Rail Type	Fairfield
Shelf 1	750mm w/Controls
Shelf 2	None
Shelf 3	None
Shelf 4	None

I confirm the ceiling height and agree with the dimensions as drawn. I confirm the equipment configuration as shown including arm lengths, platforms, gas key styles, brand, and locations; electronic, and low voltage selections and locations. I understand that any changes made after an order is in production will result in a change order fee and a delay in shipment.

CUSTOMER APPROVALS	SIGNATURE	PRINT NAME & TITLE	DATE
CLINICAL REPRESENTATIVE			
FACILITY ENGINEERING			

NOTES:

1. For weights, moments, and installation details, please refer to the Stryker Pre-installation manuals.
2. It is the owners responsibility to provide the support structure to meet requirements listed in the Pre-install Manual.
3. Customer is responsible for reviewing and approving Gas Key Style and Manufacturer.
4. Total weight capacity available for all Stryker and customer supplied accessories, based on weights moments listed in S-SERIES Pre-install Manual.
5. Bottom of Stryker mounting plate must be installed at 3.0" above finished ceiling plane. All vertical boom dimensions shown in drawing are dependent on this requirement.

Stryker Communications
571 Silveron Blvd
Flower Mound, TX 75028
PHONE: (877) 789-8106
E-FAX: (408) 754-2969
www.stryker.com

Sales Representative :
Brian Klipfel
brian.klipfel@stryker.com

Project:	
Customer: WINNESHIEK MED CTR	
City: DECORAH	State: Iowa
Equip ID: SPS-2	
Group Name: OR 1	
Quote No.: 10179648	Quote Rev No.: 4
Quote Date: 15-Aug-2023	QTY: 1
Oracle Line #:	
DWG Rev No.: 3	Block #: 19
DWG No.: 10179648S007	

WinnMed

PHONE 563-382-2911
FAX 563-387-3102

901 Montgomery Street
Decorah, IA 52101

OR 1 - Nursing Boom

Quote:10179648 Rev:4 Block#:19

stryker

9' 6"

FRONT

F1	Distribution Bd
F2	3rd Party Data Plate 1G
F3	20A/125V Duplex (4 Outlets)

RIGHT

R1	Blank
R2	Blank
R3	20A/125V Duplex (4 Outlets)

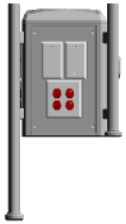

BACK

B1	Blank
B2	Blank
B3	20A/125V Duplex (4 Outlets)

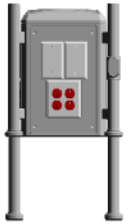

LEFT

L1	Blank
L2	Blank
L3	20A/125V Duplex (4 Outlets)

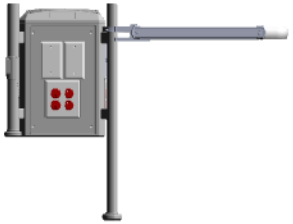

Data Communications

Qty	Description
6	1G Blank Plate
1	1G Blank W/String
1	Distribution Board

Gas Outlets

Qty	Gas Type	Key Style	Manufacturer

High Voltage

Main Power Type	Isolated
Main Power Source	Emergency
Manufacturer	Leviton

Loc.	Circuit Ref #	# of Circuits	Color	Outlet Box	Description
F3	1	1	Red	A	20A/125V Duplex (4 Outlets)
R3	2	1	Red	A	20A/125V Duplex (4 Outlets)
B3	3	1	Red	A	20A/125V Duplex (4 Outlets)
L3	4	1	Red	A	20A/125V Duplex (4 Outlets)

Circuits

Qty	Description
4	Total 15A/20A Circuits
1	Circuit for Motor and Brake

Mult-Functional Rail (MFR)

Front	676mm
Back	406mm
Control	Rear Only

I confirm the ceiling height and agree with the dimensions as drawn. I confirm the equipment configuration as shown including arm lengths, platforms, gas key styles, brand, and locations; electronic, and low voltage selections and locations. I understand that any changes made after an order is in production will result in a change order fee and a delay in shipment.

CUSTOMER APPROVALS	SIGNATURE	PRINT NAME & TITLE	DATE
CLINICAL REPRESENTATIVE			
FACILITY ENGINEERING			

NOTES:

1. For weights, moments, and installation details, please refer to the Stryker Pre-installation manuals.
2. It is the owners responsibility to provide the support structure to meet requirements listed in the Pre-install Manual.
3. Customer is responsible for reviewing and approving Gas Key Style and Manufacturer.
4. Total weight capacity available for all Stryker and customer supplied accessories, based on weights moments listed in S-SERIES Pre-Install Manual.
5. Bottom of Stryker mounting plate must be installed at 3.0" above finished ceiling plane. All vertical boom dimensions shown in drawing are dependent on this requirement.

Stryker Communications
571 Silveron Blvd.
Flower Mound, TX 75028
PHONE: (877) 739-8106
E-FAX: (408) 754-2969
www.stryker.com

Sales Representative :
Brian Klipfel
brian.klipfel@stryker.com

Project:	
Customer: WINNESHIEK MED CTR	
City: DECORAH	State: Iowa
Equip ID: SPS-2	
Group Name: OR 1	
Quote No.: 10179648	Quote Rev No.: 4
Quote Date: 15-Aug-2023	QTY: 1
Oracle Line #:	
DWG Rev No.: 3	Block #: 19
DWG No.: 10179648SC07	

WinnMed

901 Montgomery Street
Decorah, IA 52101

PHONE 563-382-2911
FAX 563-387-3102

WinnMed

Room: ORs 1 3 4

Nursing Boom

PART #	DESCRIPTION	QTY	LIST PRICE	EXT LIST PRICE
SPS-2	S-SERIES, STANDARD POWERED, 2 ROW, 2 A	3	[redacted]	

Mounting Details

Mounting Plate Single Common Plate

Ceiling Cover Standalone

Brake System Electric

MFR Configuration

Front MFR Length 676mm

Rear MFR Length 406mm

MFR Controls Rear Only

Shelves

Shelves 1

Shelf Rail Type Fairfield

Shelf 1 750mm w/Controls

High Voltage Services

20A/125V Duplex (4 Outlets) 4

Low Voltage Services

Blank Plate 6

3rd Party Data Plate 1G Plate 1

Distribution Bd Plate 1

Additional Cables

Gas Services

Gas Manufacturer Beacon Medaes

Gas Fitting Type Chemetron

PART #	DESCRIPTION	QTY	LIST PRICE	EXT LIST PRICE
P40075	ASM, HANDLE AND SHELF WITH FAIRF ELD R	3	[redacted]	
P36143	ASM, SHELF MOUNT HDW	3		
Configuration Total:				

901 Montgomery Street
Decorah, IA 52101

PHONE 563-382-2911
FAX 563-387-3102

WinnMed

WinnMed **Issue Date:** **3/6/2024**
Expansion and Renovation
Decorah, IA 52101
Furniture Specifications

CONTACT: Ben Stevens - CFO
PHONE NUMBER: 563-387-3109

ITEM NUMBER:	35

ITEM NAME:	OR 3 Ceiling Mounted Nurse Station		
ROOM NUMBER:		**QUANTITY:**	

SPECIFICATION INFORMATION

MANUFACTURER: Stryker
MODEL #: SPS-2
DIMENSIONS: OR 3
DESCRIPTION: Ceiling Mounted Nurse Station; 1 Shelf

FURNITURE & EQUIPMENT IMAGE

901 Montgomery Street
Decorah, IA 52101

PHONE 563-382-2911
FAX 563-387-3102

WinnMed

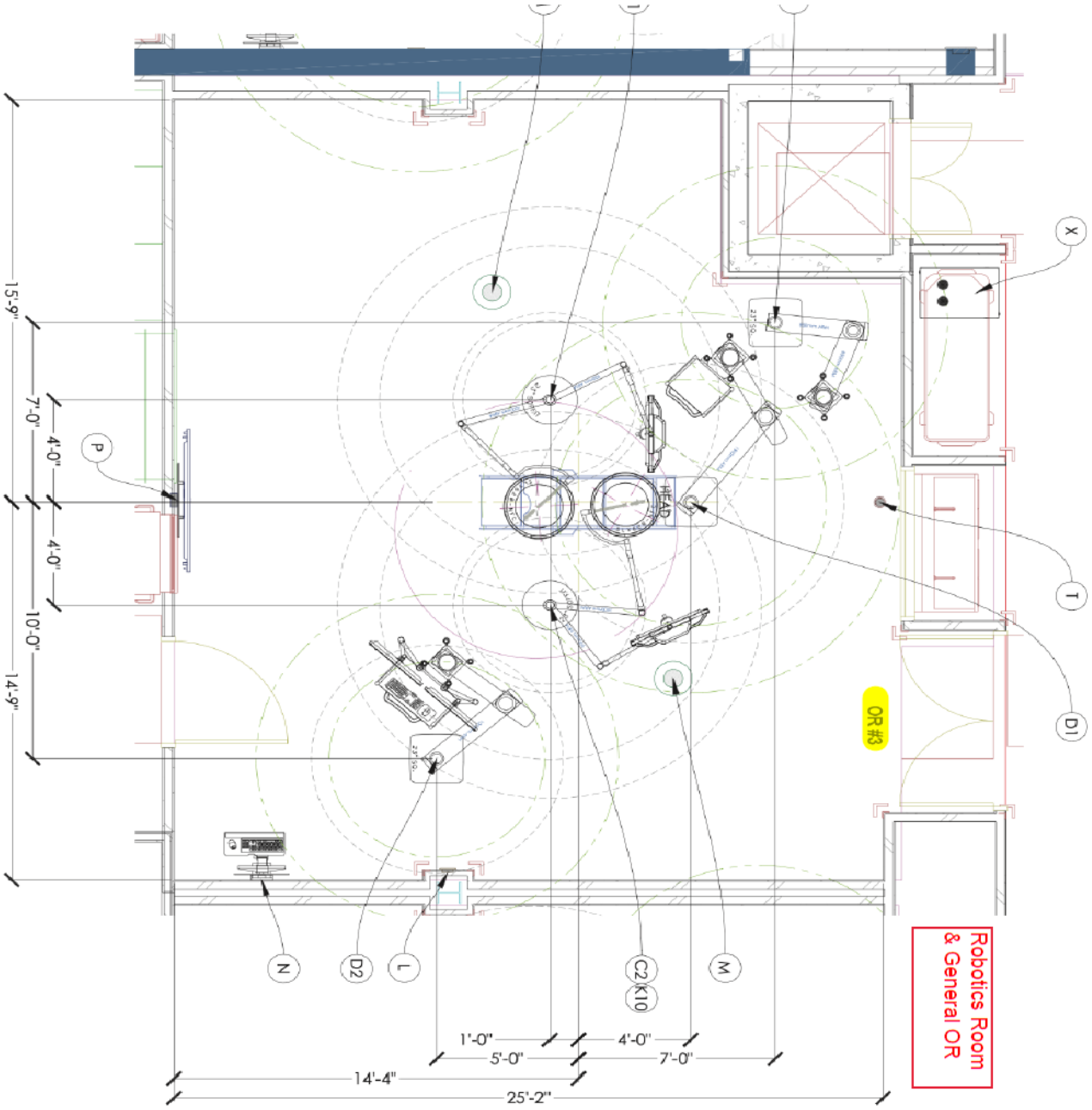

901 Montgomery Street
Decorah, IA 52101

PHONE 563-382-2911
FAX 563-387-3102

WinnMed

stryker

ORs 3 4 - Nursing Boom

Quote:10179648 Rev:4 Block#:9

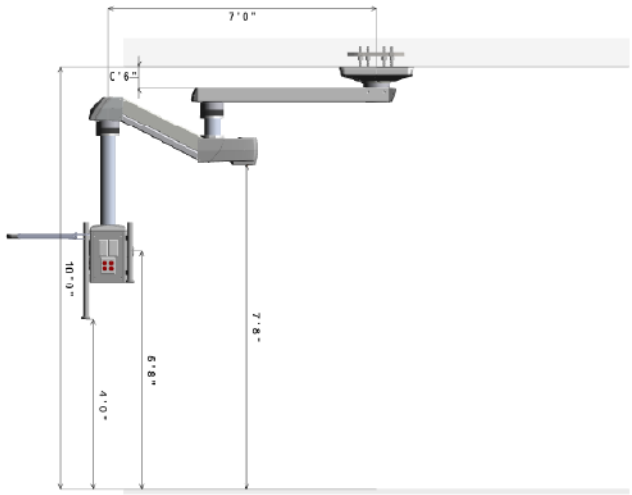

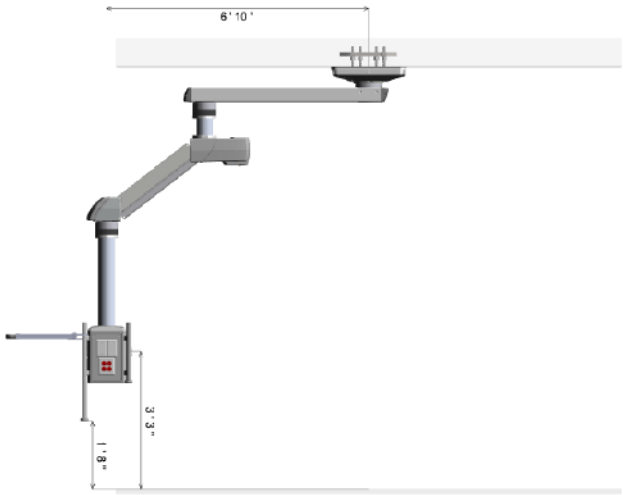

Suspension	
Brake System	Electric
Medical Rail Type	Fairfield
Top Arm Length	1300mm
Bottom Arm Length	900mm
Mid Tube Length	150mm
Column Tube Length	700mm
Weight Capacity (see note 4)	277 lbs.
Total Throat Used (%)	29
Gas Hose Length (ft)	15.91
Packaging Type	Stand Up
Manufacturing Notes	Do Not Assemble Front MFR

S-Series Equipment Boom Shelves	
Rail Type	Fairfield
Shelf 1	750mm w/Controls
Shelf 2	None
Shelf 3	None
Shelf 4	None

I confirm the ceiling height and agree with the dimensions as drawn. I confirm the equipment configuration as shown including arm lengths, platforms, gas key styles, brand, and locations; electronic, and low voltage selections and locations. I understand that any changes made after an order is in production will result in a change order fee and a delay in shipment.

CUSTOMER APPROVALS	SIGNATURE	PRINT NAME & TITLE	DATE
CLINICAL REPRESENTATIVE			
FACILITY ENGINEERING			

NOTES:

1. For weights, moments, and installation details, please refer to the Stryker Pre-installation manuals.
2. It is the owners responsibility to provide the support structure to meet requirements listed in the Pre-install Manual.
3. Customer is responsible for reviewing and approving Gas Key Style and Manufacturer.
4. Total weight capacity available for all Stryker and customer supplied accessories, based on weights moments listed in S-SERIES Pre-install Manual.
5. Bottom of Stryker mounting plate must be installed at 3.0" above finished ceiling plane. All vertical boom dimensions shown in drawing are dependent on this requirement.

Stryker Communications
571 Silvern Blvd.
Flower Mound, TX 75028
PHONE: (877) 769-8105
E-FAX: (408) 754-2969
www.stryker.com

Sales Representative :
Brian Klipfel
brian.klipfel@stryker.com

Project:	
Customer: WINNESHIEK MED CTR	
City: DECORAH	State: Iowa
Equip ID: SPS-2	
Group Name: ORs 3 4	
Quote No.: 10179648	Quote Rev No.: 4
Quote Date: 15-Aug-2023	QTY: 2
Oracle Line #:	
DWG Rev No.: 1	Block #: 9
DWG No.: 10179648S004	

PHONE 563-382-2911
FAX 563-387-3102

901 Montgomery Street
Decorah, IA 52101

ORs 3 4 - Nursing Boom

Quote:10179648 Rev:4 Block#:9

stryker

10' 0"

FRONT

F1	Distribution Bd
F2	3rd Party Data Plate 1G
F3	20A/125V Duplex (4 Outlets)

RIGHT

R1	Blank
R2	Blank
R3	20A/125V Duplex (4 Outlets)

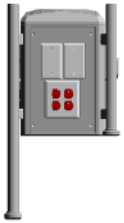

BACK

B1	Blank
B2	Blank
B3	20A/125V Duplex (4 Outlets)

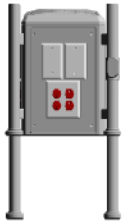

LEFT

L1	Blank
L2	Blank
L3	20A/125V Duplex (4 Outlets)

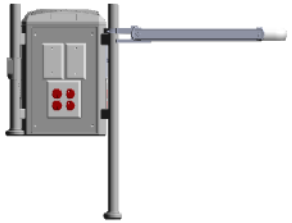

Data Communications

Qty	Description
6	1G Blank Plate
1	1G Blank W/String
1	Distribution Board

Gas Outlets

Qty	Gas Type	Key Style	Manufacturer

High Voltage

Main Power Type	Isolated
Main Power Source	Emergency
Manufacturer	Leviton

Loc.	Circuit Ref #	# of Circuits	Color	Outlet Box	Description
F3	1	1	Red	A	20A/125V Duplex (4 Outlets)
R3	2	1	Red	A	20A/125V Duplex (4 Outlets)
B3	3	1	Red	A	20A/125V Duplex (4 Outlets)
L3	4	1	Red	A	20A/125V Duplex (4 Outlets)

Circuits

Qty	Description
4	Total 15A/20A Circuits
1	Circuit for Motor and Brake

Multi-Functional Rail (MFR)

Front	675mm
Back	405mm
Control	Rear Only

I confirm the ceiling height and agree with the dimensions as drawn. I confirm the equipment configuration as shown including arm lengths, platforms, gas key styles, brand, and locations; electronic, and low voltage selections and locations. I understand that any changes made after an order is in production will result in a change order fee and a delay in shipment.

CUSTOMER APPROVALS	SIGNATURE	PRINT NAME & TITLE	DATE
CLINICAL REPRESENTATIVE			
FACILITY ENGINEERING			

NOTES:

1. For weights, moments, and installation details, please refer to the Stryker Pre-installation manuals.
2. It is the owners responsibility to provide the support structure to meet requirements listed in the Pre-install Manual.
3. Customer is responsible for reviewing and approving Gas Key Style and Manufacturer.
4. Total weight capacity available for all Stryker and customer supplied accessories, based on weights moments listed in S-SERIES Pre-Install Manual.
5. Bottom of Stryker mounting plate must be installed at 3.0" above finished ceiling plane. All vertical boom dimensions shown in drawing are dependent on this requirement.

Stryker Communications
571 Silveron Blvd.
Flower Mound, TX 75028
PHONE: (877) 789-8105
E-FAX: (408) 754-2966
www.stryker.com

Sales Representative :
Brian Klipfel
brian.klipfel@stryker.com

Project:	
Customer: WINNESHIEK MED CTR	
City: DECORAH	State: Iowa
Equip ID: SPS-2	
Group Name: ORs 3 4	
Quote No.: 10179648	Quote Rev No.: 4
Quote Date: 15-Aug-2023	QTY: 2
Oracle Line #:	
DWG Rev No.: 1	Block #: 9
DWG No.: 10179648S004	

WinnMed

PHONE 563-382-2911
FAX 563-387-3102

901 Montgomery Street
Decorah, IA 52101

WinnMed

Room: ORs 1 3 4

Nursing Boom

PART #	DESCRIPTION	QTY	LIST PRICE	EXT LIST PRICE
SPS-2	S-SERIES, STANDARD POWERED, 2 ROW, 2 A	3	[redacted]	

Mounting Details

Mounting Plate Single Common Plate

Ceiling Cover Standalone

Brake System Electric

MFR Configuration

Front MFR Length 676mm

Rear MFR Length 406mm

MFR Controls Rear Only

Shelves

Shelves 1

Shelf Rail Type Fairfield

Shelf 1 750mm w/Controls

High Voltage Services

20A/125V Duplex (4 Outlets) 4

Low Voltage Services

Blank Plate 6

3rd Party Data Plate 1G Plate 1

Distribution Bd Plate 1

Additional Cables

Gas Services

Gas Manufacturer Beacon Medaes

Gas Fitting Type Chemetron

PART #	DESCRIPTION	QTY	LIST PRICE	EXT LIST PRICE
P40075	ASM, HANDLE AND SHELF WITH FAIRF ELD R	3	[redacted]	
P36143	ASM, SHELF MOUNT HDW	3		
Configuration Total:				

901 Montgomery Street
Decorah, IA 52101

PHONE 563-382-2911
FAX 563-387-3102

WinnMed

WinnMed **Issue Date:** **3/6/2024**
Expansion and Renovation
Decorah, IA 52101
Furniture Specifications

CONTACT: Ben Stevens - CFO
PHONE NUMBER: 563-387-3109

ITEM NUMBER:	36

ITEM NAME:	OR 4 Ceiling Mounted Nurse Station		
ROOM NUMBER:		**QUANTITY:**	

SPECIFICATION INFORMATION

MANUFACTURER: Stryker
MODEL #: SPS-2
DIMENSIONS: OR 4
DESCRIPTION: Ceiling Mounted Nurse Station; 1 Shelf

FURNITURE & EQUIPMENT IMAGE

901 Montgomery Street
Decorah, IA 52101

PHONE 563-382-2911
FAX 563-387-3102

WinnMed

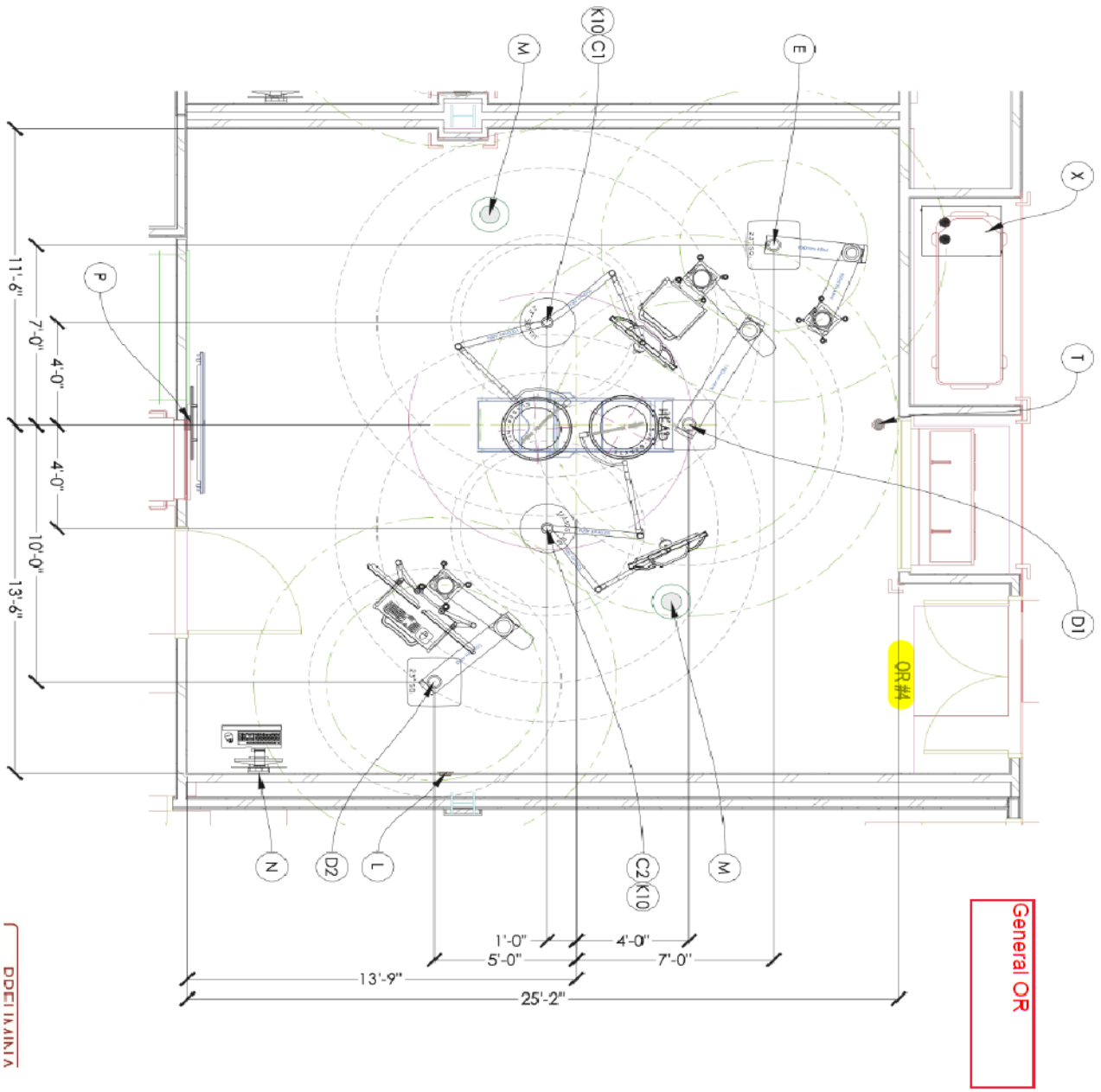

901 Montgomery Street
Decorah, IA 52101

PHONE 563-382-2911
FAX 563-387-3102

WinnMed

stryker

ORs 3 4 - Nursing Boom

Quote:10179648 Rev:4 Block#:9

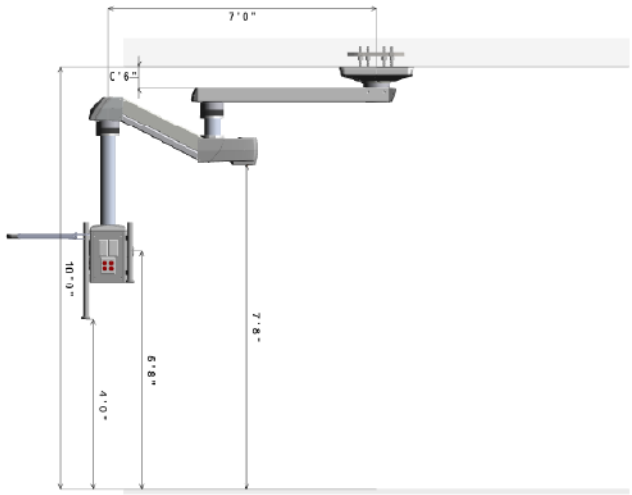

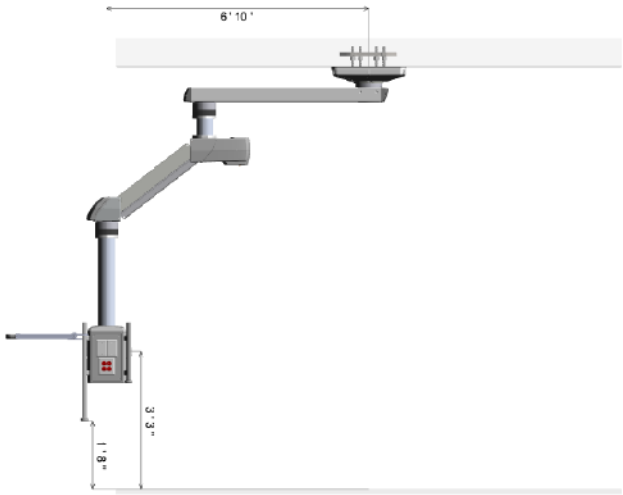

Suspension	
Brake System	Electric
Medical Rail Type	Fairfield
Top Arm Length	1300mm
Bottom Arm Length	900mm
Mid Tube Length	150mm
Column Tube Length	700mm
Weight Capacity (see note 4)	277 lbs.
Total Throat Used (%)	29
Gas Hose Length (ft)	15.91
Packaging Type	Stand Up
Manufacturing Notes	Do Not Assemble Front MFR

S-Series Equipment Boom Shelves	
Rail Type	Fairfield
Shelf 1	750mm w/Controls
Shelf 2	None
Shelf 3	None
Shelf 4	None

I confirm the ceiling height and agree with the dimensions as drawn. I confirm the equipment configuration as shown including arm lengths, platforms, gas key styles, brand, and locations; electronic, and low voltage selections and locations. I understand that any changes made after an order is in production will result in a change order fee and a delay in shipment.

CUSTOMER APPROVALS	SIGNATURE	PRINT NAME & TITLE	DATE
CLINICAL REPRESENTATIVE			
FACILITY ENGINEERING			

NOTES:

1. For weights, moments, and installation details, please refer to the Stryker Pre-installation manuals.
2. It is the owners responsibility to provide the support structure to meet requirements listed in the Pre-install Manual.
3. Customer is responsible for reviewing and approving Gas Key Style and Manufacturer.
4. Total weight capacity available for all Stryker and customer supplied accessories, based on weights moments listed in S-SERIES Pre-install Manual.
5. Bottom of Stryker mounting plate must be installed at 3.0" above finished ceiling plane. All vertical boom dimensions shown in drawing are dependent on this requirement.

Stryker Communications
571 Silvern Blvd.
Flower Mound, TX 75028
PHONE: (877) 769-8105
E-FAX: (408) 754-2969
www.stryker.com

Sales Representative :
Brian Klipfel
brian.klipfel@stryker.com

Project:	
Customer: WINNESHIEK MED CTR	
City: DECORAH	State: Iowa
Equip ID: SPS-2	
Group Name: ORs 3 4	
Quote No.: 10179648	Quote Rev No.: 4
Quote Date: 15-Aug-2023	QTY: 2
Oracle Line #:	
DWG Rev No.: 1	Block #: 9
DWG No.: 10179648S004	

PHONE 563-382-2911
FAX 563-387-3102

901 Montgomery Street
Decorah, IA 52101

ORs 3 4 - Nursing Boom

Quote:10179648 Rev:4 Block#:9

stryker

10' 0"

FRONT

F1	Distribution Bd
F2	3rd Party Data Plate 1G
F3	20A/125V Duplex (4 Outlets)

RIGHT

R1	Blank
R2	Blank
R3	20A/125V Duplex (4 Outlets)

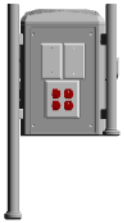

BACK

B1	Blank
B2	Blank
B3	20A/125V Duplex (4 Outlets)

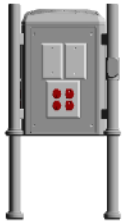

LEFT

L1	Blank
L2	Blank
L3	20A/125V Duplex (4 Outlets)

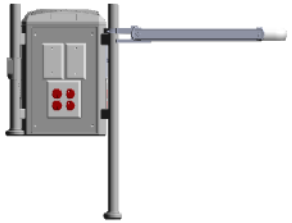

Data Communications

Qty	Description
6	1G Blank Plate
1	1G Blank W/String
1	Distribution Board

Gas Outlets

Qty	Gas Type	Key Style	Manufacturer

High Voltage

Main Power Type	Isolated
Main Power Source	Emergency
Manufacturer	Leviton

Loc.	Circuit Ref #	# of Circuits	Color	Outlet Box	Description
F3	1	1	Red	A	20A/125V Duplex (4 Outlets)
R3	2	1	Red	A	20A/125V Duplex (4 Outlets)
B3	3	1	Red	A	20A/125V Duplex (4 Outlets)
L3	4	1	Red	A	20A/125V Duplex (4 Outlets)

Circuits

Qty	Description
4	Total 15A/20A Circuits
1	Circuit for Motor and Brake

Multi-Functional Rail (MFR)

Front	675mm
Back	405mm
Control	Rear Only

I confirm the ceiling height and agree with the dimensions as drawn. I confirm the equipment configuration as shown including arm lengths, platforms, gas key styles, brand, and locations; electronic, and low voltage selections and locations. I understand that any changes made after an order is in production will result in a change order fee and a delay in shipment.

CUSTOMER APPROVALS	SIGNATURE	PRINT NAME & TITLE	DATE
CLINICAL REPRESENTATIVE			
FACILITY ENGINEERING			

NOTES:

1. For weights, moments, and installation details, please refer to the Stryker Pre-installation manuals.
2. It is the owners responsibility to provide the support structure to meet requirements listed in the Pre-install Manual.
3. Customer is responsible for reviewing and approving Gas Key Style and Manufacturer.
4. Total weight capacity available for all Stryker and customer supplied accessories, based on weights moments listed in S-SERIES Pre-Install Manual.
5. Bottom of Stryker mounting plate must be installed at 3.0" above finished ceiling plane. All vertical boom dimensions shown in drawing are dependent on this requirement.

Stryker Communications
571 Silveron Blvd.
Flower Mound, TX 75028
PHONE: (877) 789-8105
E-FAX: (408) 754-2966
www.stryker.com

Sales Representative :
Brian Klipfel
brian.klipfel@stryker.com

Project:	
Customer: WINNESHIEK MED CTR	
City: DECORAH	State: Iowa
Equip ID: SPS-2	
Group Name: ORs 3 4	
Quote No.: 10179648	Quote Rev No.: 4
Quote Date: 15-Aug-2023	QTY: 2
Oracle Line #:	
DWG Rev No.: 1	Block #: 9
DWG No.: 10179648S004	

WinnMed

PHONE 563-382-2911
FAX 563-387-3102

901 Montgomery Street
Decorah, IA 52101

WinnMed

Room: ORs 1 3 4

Nursing Boom

PART #	DESCRIPTION	QTY	LIST PRICE	EXT LIST PRICE
SPS-2	S-SERIES, STANDARD POWERED, 2 ROW, 2 A	3	[redacted]	

Mounting Details

Mounting Plate Single Common Plate

Ceiling Cover Standalone

Brake System Electric

MFR Configuration

Front MFR Length 676mm

Rear MFR Length 406mm

MFR Controls Rear Only

Shelves

Shelves 1

Shelf Rail Type Fairfield

Shelf 1 750mm w/Controls

High Voltage Services

20A/125V Duplex (4 Outlets) 4

Low Voltage Services

Blank Plate 6

3rd Party Data Plate 1G Plate 1

Distribution Bd Plate 1

Additional Cables

Gas Services

Gas Manufacturer Beacon Medaes

Gas Fitting Type Chemetron

PART #	DESCRIPTION	QTY	LIST PRICE	EXT LIST PRICE
P40075	ASM, HANDLE AND SHELF WITH FAIRF ELD R	3	[redacted]	
P36143	ASM, SHELF MOUNT HDW	3		
Configuration Total:				

901 Montgomery Street
Decorah, IA 52101

PHONE 563-382-2911
FAX 563-387-3102

WinnMed

WinnMed **Issue Date:** **3/6/2024**
Expansion and Renovation
Decorah, IA 52101
Furniture Specifications

CONTACT: Ben Stevens - CFO
PHONE NUMBER: 563-387-3109

ITEM NUMBER:	37

ITEM NAME:	Integration System; Video Routing Platform		
ROOM NUMBER:		**QUANTITY:**	

SPECIFICATION INFORMATION

MANUFACTURER: Stryker
MODEL #: 1678100004
DIMENSIONS:
DESCRIPTION: Integration System; Video Routing Platform

FURNITURE & EQUIPMENT IMAGE

901 Montgomery Street
Decorah, IA 52101

PHONE 563-382-2911
FAX 563-387-3102

WinnMed

Room: ORs 1 3 4

COR IP Integration

Connected OR IP Integration System

The Connected OR IP Integration System is a modular, scalable and upgradeable operating room video routing platform. The 4K capable system provides intuitive control and routing of audio, video and data sources from a centrally located touch panel. Designed for the operating room, COR IP features customizable room presets, integrated surgical checklists, real-time messaging and centralized OR equipment controls. The system also seamlessly interfaces with additional Stryker platforms to improve clinical efficiency with optional EMR integration, two-way audio/video conferencing, remote in-room viewing, and server-based media asset management solutions.

PART #	DESCRIPTION	QTY	LIST PRICE	EXT LIST PRICE
1678100004	CONNECTED OR IP BASE PKG 004	3	[redacted]	

Inputs

Sources
- Stryker 4K Endo Cam 1
- Stryker HD ILC 1
- Boom 4K HDMI 1
- Boom HD DisplayPort 1

Boom Plates
- HD-SDI Boom Plate 2
- 4-in-1 Boom Plate 3

Wall Plates

Outputs

Suspension Display
- Stryker 4K Displays 2

Wall Display
- Stryker 4K Displays 1

Rack
- Install Type OR Adjacent
- Stryker Provided UPS Yes
- Stryker 24U Rack Yes
- Switch Dedicated

Options

Additional Packages
- PIP/PBP/QUAD
- Mobile Phone Connection
- Secondary_Audio

Audio Package
- Basic - Ceiling Mounted

Stryker 75in 4k Display 1

Encoders

PART #	DESCRIPTION	QTY	LIST PRICE	EXT LIST PRICE
P39859	COMP, BARCO 21 5IN TP AND POWER SUPPLY	3	[redacted]	
P45613	CONNECTED OR IP USB 3 1 EXTENSION PKG	3		
P45670	CONNECTED OR IP STRYKER 4K DISPLAY FAIL-SAFE KIT	3		
P49719	CONNECTED OR IP DOUBLE HD VIDEO-PLATE INSTALL KIT	6		
P49718	CONNECTED OR IP S NGLE HD V DEO-PLATE NSTALL KIT	3		
P45673	CONNECTED OR IP 2 CEILING SPEAKER PKG	3		
P45160	COMP, SELF-AMPLIFIED, MASTER IN-CE L NG SPEAKER PAIR	3		
P49713	CONNECTED OR IP V DEO COMPOSITOR PKG	3		
P43761	COMPONENT, BARCO MNA 240 1U SHELF	3		
P45644	CONNECTED OR IP MOBILE PHONE CONNECTIVITY PKG	3		
P47765	CONNECTED OR IP N ROOM SECONDARY AUDIO INPUT KIT	3		
P47995	CABLE, BROADATA 4K PLATE INPUT CABLE, 5M	6		
P47593	CABLE, NORTH AMERICA, MEDICAL GRADE, EC 60320 C13 TO NEMA 5-15, 120 VAC, 10 A, 3FT	15		
P49725	CONNECTED OR IP TOUCH PANEL INSTALL KIT	3		
P49689	CONNECTED OR IP STRYKER 4K ENDOCAM INSTALL KIT	3		
P49712	CONNECTED OR IP DVI OR HD HDMI IN-LIGHT CAMERA INSTALL KIT	3		
P49703	CONNECTED OR IP HD DP BOOM SOURCE INSTALL KIT	3		
P45641	CONNECTED OR IP 4K WALL DISPLAY INSTALL KIT	3		
P49707	CONNECTED OR IP 4K HDMI DISPLAY INSTALL KIT	6		
P45668	CONNECTED OR IP BOOM SUSPENSION MNA CABLE KIT	6	[redacted]	
P46220	DISPLAY, 75" 4K	3		
0100224158	MOUNT PLATE PLASMA/LCD	3		
P51445	CONNECTED OR IP S NGLE 4K VIDEO-PLATE INSTALL KIT	3		
P39292	CABLE, DUPLEX-LC-M TO DUPLEX-LC-M, OM3, 2 0M	6		
P45623	CONNECTED OR IP 4K HDMI BOOM SOURCE INSTALL KIT	3		
Configuration Total:			[redacted]	

901 Montgomery Street
Decorah, IA 52101

PHONE 563-382-2911
FAX 563-387-3102

WinnMed

WinnMed **Issue Date:** **3/6/2024**
Expansion and Renovation
Decorah, IA 52101
Furniture Specifications

CONTACT: Ben Stevens - CFO
PHONE NUMBER: 563-387-3109

ITEM NUMBER:	38

ITEM NAME:	Hospital Status System		
ROOM NUMBER:		**QUANTITY:**	

SPECIFICATION INFORMATION	
MANUFACTURER:	Stryker
MODEL #:	1678055001
DIMENSIONS:	
DESCRIPTION:	Hospital Status System

FURNITURE & EQUIPMENT IMAGE

901 Montgomery Street
Decorah, IA 52101

PHONE 563-382-2911
FAX 563-387-3102

WinnMed

Room: ORs 1 3 4 Endo Rooms 1 and 2 — Hospital Status

Hospital Status

Designed to improve hospital workflow and provide visibility into any area of the hospital by streaming live video feeds to your desktop or tablet. Hospital Status allows you to easily group and manage all your video feeds in one place.

PART #	DESCRIPTION	QTY	LIST PRICE	EXT LIST PRICE
1678055001	CONNECTED OR APPLICATION CENTER	1	[redacted]	

PART #	DESCRIPTION	QTY	LIST PRICE	EXT LIST PRICE
1678055003	CONNECTED OR HOSPITAL STATUS	1	[redacted]	
P48510	AXIS CAMERA RECESSED MOUNT	6		
8888889022	CAPITAL CAMERA NETWORK CAMERA	6		
P44028	CAMERA, NETWORK	6		
8888882022	HOSPITAL STATUS MAINTENANCE AND SUPPORT, 1-15 CAMERAS	1		
8888889016	HOSPITAL STATUS, 1-15 CAMERAS	1		
Configuration Total:				

901 Montgomery Street
Decorah, IA 52101

PHONE 563-382-2911
FAX 563-387-3102

WinnMed

WinnMed **Issue Date:** **3/6/2024**
Expansion and Renovation
Decorah, IA 52101
Furniture Specifications

CONTACT: Ben Stevens - CFO
PHONE NUMBER: 563-387-3109

ITEM NUMBER:	39

ITEM NAME:	OR 3 Surgical Light		
ROOM NUMBER:		**QUANTITY:**	

SPECIFICATION INFORMATION

MANUFACTURER: Stryker
MODEL #: FD 2203
DIMENSIONS: OR 3
DESCRIPTION: OR 3 Surgical Light w/ Monitor; 2 Arm; Camera Ready; Sterile Control Prep & Light Handle

FURNITURE & EQUIPMENT IMAGE

901 Montgomery Street
Decorah, IA 52101

PHONE 563-382-2911
FAX 563-387-3102

WinnMed

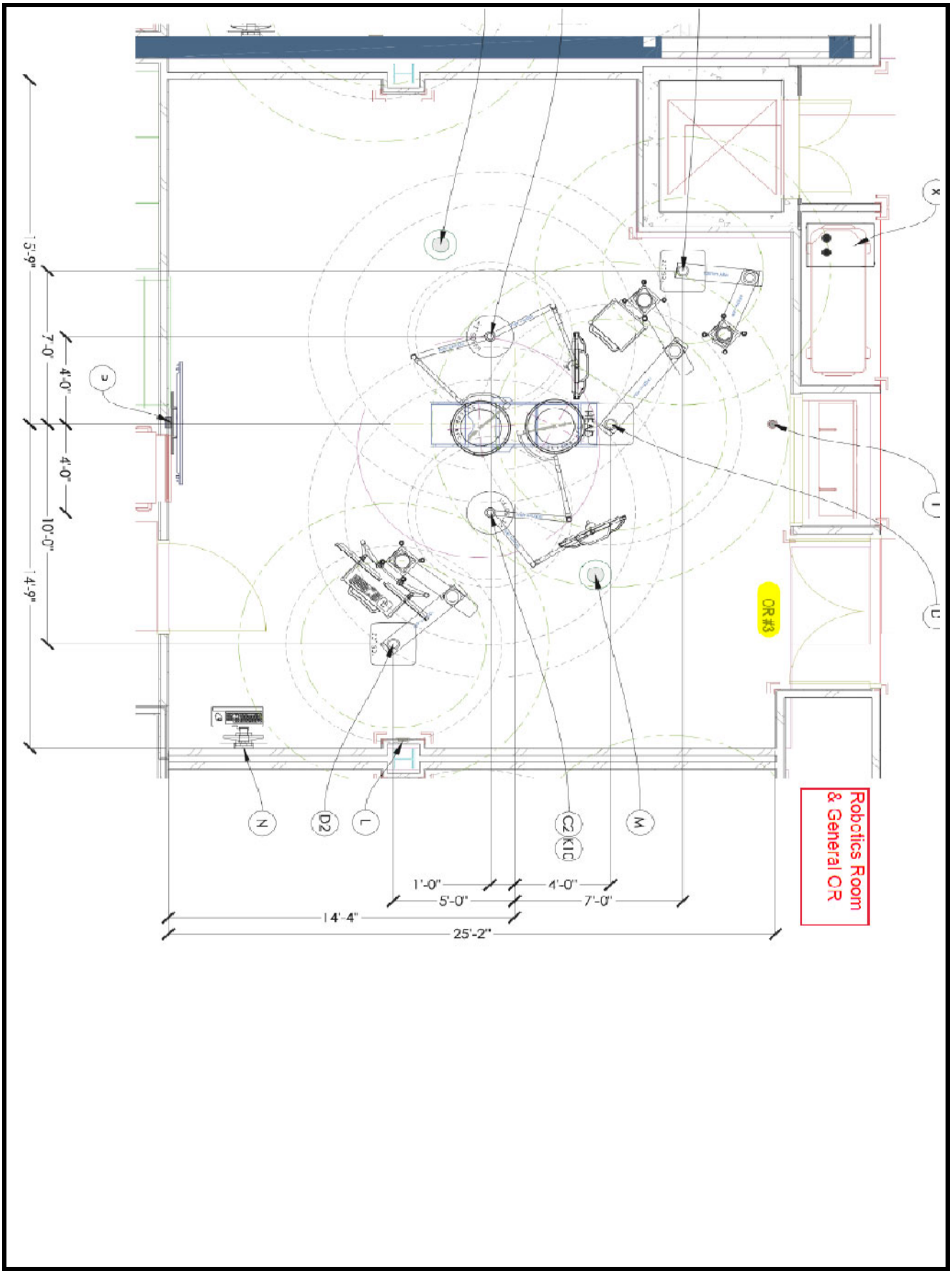

901 Montgomery Street
Decorah, IA 52101

PHONE 563-382-2911
FAX 563-387-3102

ORs 3 4 - SLX Light with UDM

Quote:10179648 Rev:4 Block#:13

stryker

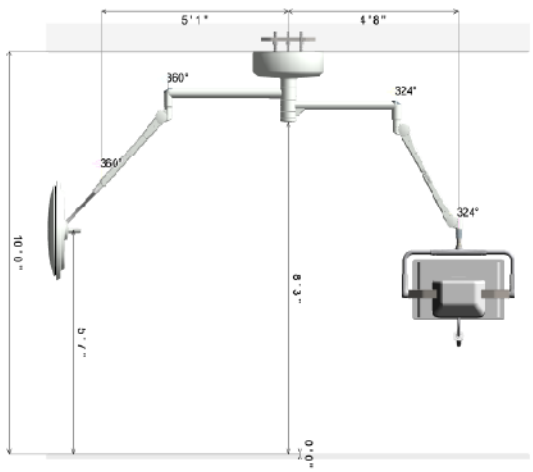

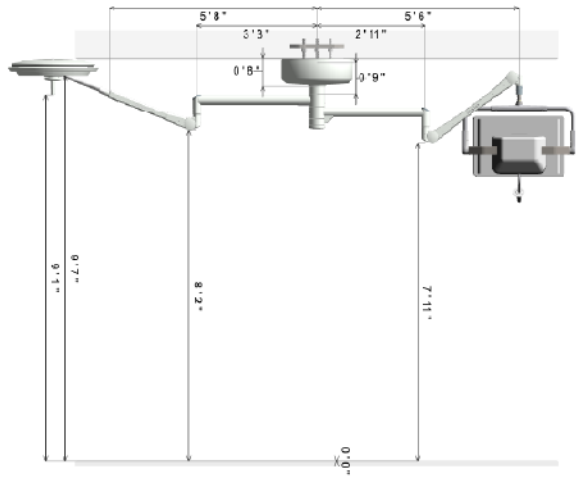

Main Mount	
Mounting Plate Type	Single Common Plate
Ceiling Cover Tube Length	CB 5423004 230
Electronics in SK Box	Yes
Wall Control?	Yes
Camera Type	StrykeCam HD
Central Endo Lite	No
Wall Control Type	recessed
Light Handle Type	SC+ Devon slip on
Device Control	No
SK Box Type	surface mount

Arm No.1 (MP1)	
Equipment	SLX628
Horizontal Arm	1000
HCT Length	None
Cardanic	NFC
Dual Control	No
Mains Voltage	120VAC

Arm No 2 (MP2)	
Equipment	UDM (19" - 32")
Horizontal Arm	900
HCT Length	None
Dual Control	No
First Monitor	UDM (19" - 32")
Video Bundle	StrykerUDM

I confirm the ceiling height and agree with the dimensions as drawn. I confirm the equipment configuration as shown including arm lengths, platforms, gas key styles, brand, and locations; electronic, and low voltage selections and locations. I understand that any charges made after an order is in production will result in a change order fee and a delay in shipment.

CUSTOMER APPROVALS	SIGNATURE	PRINT NAME & TITLE	DATE
CLINICAL REPRESENTATIVE			
FACILITY ENGINEERING			

NOTES:

1. For weights, moments, and installation details, please refer to the Stryker Pre-installation manuals.
2. It is the owner's responsibility to provide the support structure to meet requirements listed in the Pre-install Manual.

Stryker Communications
571 Silveron Blvd.
Flower Mound, TX 75028
PHONE: (877) 799-8106
E-FAX: (408) 754-2969
www.stryker.com

Sales Representative :
Brian Klipfel
brian.klipfel@stryker.com

Project:	
Customer: WINNESHIEK MED CTR	
City: DECORAH	State: Iowa
Equip ID: F 628/SFP	
Group Name: ORs 3 4	
Quote No.: 10179648	Quote Rev No.: 4
Quote Date: 15-Aug-2023	QTY: 2
Oracle Line #:	
DWG Rev No.: 1	Block #: 13
DWG No.: 10179648C004	

WinnMed

901 Montgomery Street
Decorah, IA 52101

PHONE 563-382-2911
FAX 563-387-3102

WinnMed

Room: ORs 3 4

SLX Light with UDM

SLX Surgical Light

The Stryker Surgical Light combines innovative features, inspired by the best technology, to provide superior light quality for your surgical team. And with so many options to customize, configure, and control your light, you can now enhance the OR experience like never before.

PART #	DESCRIPTION	QTY	LIST PRICE	EXT LIST PRICE
FD 2203	LIGHT / SFP1	2	[redacted]	

Mounting Details

Mounting Plate: Single Common Plate
Multiple Suspension Mounting: None
Ceiling Cover: CB 5423004 590x197 TD 125mm
Drop Tube Length: 230

Controls

Wall Control: Wall mounted (recessed)
Cardanic Control: No
Control Unit Type: Touch
Light Handle Type: Sterile Control+ (Devon slip on)

Power Supply

SK Box: Above Ceiling or Surface Mount

Configuration Details

Arm 1: Lighthead
Arm Length: 1000
Cardanic Style: NFC
Camera Prep: Yes

Arm 2: Monitor bracket
Arm Length: 900

PART #	DESCRIPTION	QTY	LIST PRICE	EXT LIST PRICE
P43779	BUNDLE, STRYKECAM READY	2	[redacted]	
CY 9000150	LIGHT OR FLAT PANEL HANDLE	2		
CY 9000103	UDM INTERSTITIAL AND SUSPENSION CABLES	2		
CY 9600105	PREPARATION CAMERA STRYKECAM HD	2		
CY 1008104	MULTI COLOR TOUCH WALL CONTROL DISPLAY FOR S NGLE, DUAL OR TRIPLE F-GENERATION LIGHT CONFIGURATION	2	[redacted]	
CY 9000122	STERILE CONTROL PREP	2		
CY 9000123	STERILE CONTROL+ LIGHT HANDLE	2		
Configuration Total:			[redacted]	

901 Montgomery Street
Decorah, IA 52101

PHONE 563-382-2911
FAX 563-387-3102

WinnMed

WinnMed **Issue Date:** **3/6/2024**
Expansion and Renovation
Decorah, IA 52101
Furniture Specifications

CONTACT: Ben Stevens - CFO
PHONE NUMBER: 563-387-3109

ITEM NUMBER:	40

ITEM NAME:	OR 4 Surgical Light		
ROOM NUMBER:		**QUANTITY:**	

SPECIFICATION INFORMATION	
MANUFACTURER:	Stryker
MODEL #:	FD 2203
DIMENSIONS:	OR 4
DESCRIPTION:	OR 4 Surgical Light w/ Monitor; 2 Arm; Camera Ready; Sterile Control Prep & Light Handle

FURNITURE & EQUIPMENT IMAGE

901 Montgomery Street
Decorah, IA 52101

PHONE 563-382-2911
FAX 563-387-3102

WinnMed

WinnMed **Issue Date:** **3/6/2024**
Expansion and Renovation
Decorah, IA 52101
Furniture Specifications

CONTACT: Ben Stevens - CFO
PHONE NUMBER: 563-387-3109

ITEM NUMBER:	41

ITEM NAME:	OR 3 Surgical Light		
ROOM NUMBER:		**QUANTITY:**	

SPECIFICATION INFORMATION	
MANUFACTURER:	Stryker
MODEL #:	FD 2203
DIMENSIONS:	OR 3
DESCRIPTION:	OR 3 Surgical Light w/ Monitor; 2 Arm; Sterile Control Prep & Light Handle

FURNITURE & EQUIPMENT IMAGE

901 Montgomery Street
Decorah, IA 52101

PHONE 563-382-2911
FAX 563-387-3102

WinnMed

WinnMed **Issue Date:** **3/6/2024**
Expansion and Renovation
Decorah, IA 52101
Furniture Specifications

CONTACT: Ben Stevens - CFO
PHONE NUMBER: 563-387-3109

ITEM NUMBER:	42

ITEM NAME:	OR 4 Surgical Light		
ROOM NUMBER:		**QUANTITY:**	

SPECIFICATION INFORMATION

MANUFACTURER: Stryker
MODEL #: FD 2203
DIMENSIONS: OR 4
DESCRIPTION: OR 4 Surgical Light w/ Monitor; 2 Arm; Sterile Control Prep & Light Handle

FURNITURE & EQUIPMENT IMAGE

WinnMed

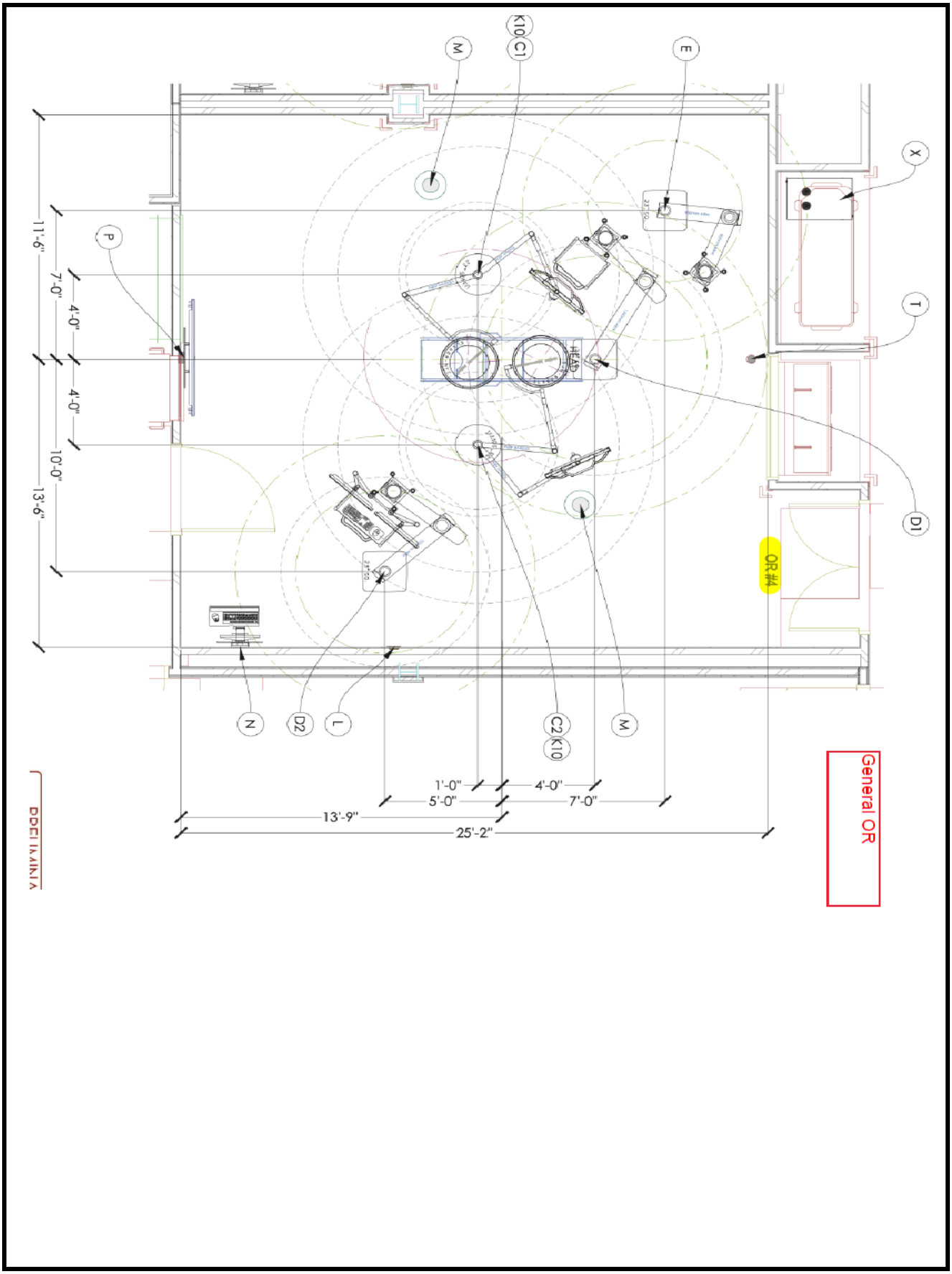

901 Montgomery Street
Decorah, IA 52101

PHONE 563-382-2911
FAX 563-387-3102

ORs 3 4 - SLX Light with UDM

Quote:10179648 Rev:4 Block#:14

stryker

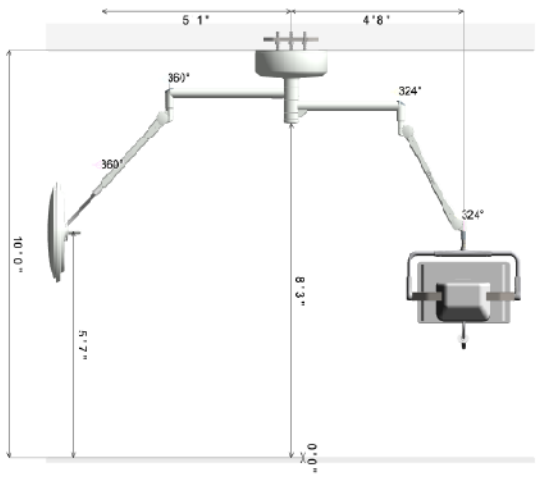

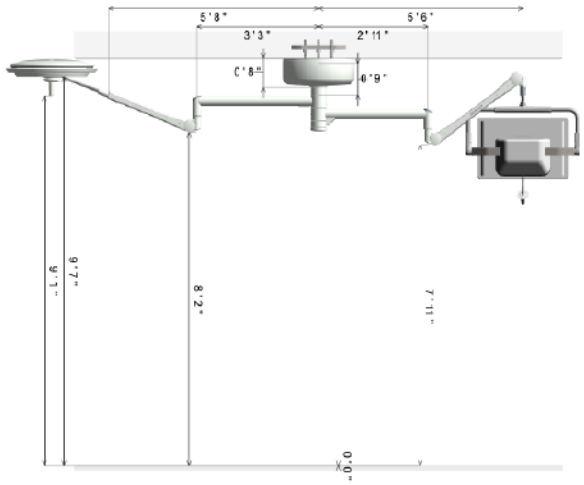

Main Mount	
Mounting Plate Type	Single Common Plate
Ceiling Cover	CB 5423004
Tube Length	230
Electronics in SK Box	Yes
Wall Control?	Yes
Camera Type	None
Central Endo Lite	No
Wall Control Type	recessed
Light Handle Type	SC+ Devon slip on
Device Control	No
SK Box Type	surface mount

Arm No.1 (MP1)	
Equipment	SLX628
Horizontal Arm	1000
HCT Length	None
Carcanic	NFC
Dual Control	No
Mains Voltage	120VAC

Arm No.2 (MP2)	
Equipment	UDM (19" - 32")
Horizontal Arm	900
HCT Length	None
Dual Control	No
First Monitor	UDM (19" - 32")
Video Bundle	StrykerUDM

I confirm the ceiling height and agree with the dimensions as drawn. I confirm the equipment configuration as shown including arm lengths, platforms, gas key styles, brand, and locations; electronic, and low voltage selections and locations. I understand that any changes made after an order is in production will result in a change order fee and a delay in shipment.

CUSTOMER APPROVALS	SIGNATURE	PRINT NAME & TITLE	DATE
CLINICAL REPRESENTATIVE			
FACILITY ENGINEERING			

NOTES:

1. For weights, moments, and installation details, please refer to the Stryker Pre-installation manuals.
2. It is the owners responsibility to provide the support structure to meet requirements listed in the Pre-install Manual.

Stryker Communications
571 Silveron Blvd.
Flower Mound, TX 75028
PHONE: (877) 789-8105
E-FAX: (469) 754-2969
www.stryker.com

Sales Representative :
Brian Kipfel
brian.klipfel@stryker.com

Project:	
Customer: WINNESHIEK MED CTR	
City: DECORAH	State: Iowa
Equip ID: F 628/SFP	
Group Name: ORs 3 4	
Quote No.: 10179648	Quote Rev No.: 4
Quote Date: 15-Aug-2023	QTY: 2
Oracle Line #:	
DWG Rev No.: 1	Block #: 14
DWG No.: 10179648C005	

WinnMed

PHONE 563-382-2911
FAX 563-387-3102

901 Montgomery Street
Decorah, IA 52101

WinnMed

Room: ORs 3 4

SLX Light with UDM

PART #	DESCRIPTION	QTY	LIST PRICE	EXT LIST PRICE
FD 2203	LIGHT / SFP1	2	[redacted]	

Mounting Details
Mounting Plate: Single Common Plate
Multiple Suspension Mounting: None
Ceiling Cover: CB 5423004 580x197 TD 125mm
Drop Tube Length: 230

Controls
Wall Control: Wall mounted (recessed)
Cardanic Control: No
Control Unit Type: Touch
Light Handle Type: Sterile Control+ (Devon slip on)

Power Supply
SK Box: Above Ceiling or Surface Mount

Configuration Details
Arm 1: Lighthead
Arm Length: 1000
Cardanic Style: NFC
Camera Prep: No

Arm 2: Monitor bracket
Arm Length: 900

PART #	DESCRIPTION	QTY	LIST PRICE	EXT LIST PRICE
CY 9000150	LIGHT OR FLAT PANEL HANDLE	2	[redacted]	
CY 9000103	UDM INTERSTITIAL AND SUSPENSION CABLES	2		
CY 1008104	MULTI COLOR TOUCH WALL CONTROL DISPLAY FOR S NGLE, DUAL OR TRIPLE F-GENERATION LIGHT CONFIGURATION	2		
CY 9000122	STERILE CONTROL PREP	2		
CY 9000123	STERILE CONTROL+ LIGHT HANDLE	2		
Configuration Total:				

901 Montgomery Street
Decorah, IA 52101

PHONE 563-382-2911
FAX 563-387-3102

WinnMed

WinnMed **Issue Date:** **3/6/2024**
Expansion and Renovation
Decorah, IA 52101
Furniture Specifications

CONTACT: Ben Stevens - CFO
PHONE NUMBER: 563-387-3109

ITEM NUMBER:	43

ITEM NAME:	OR 3 Anesthesia Boom		
ROOM NUMBER:		**QUANTITY:**	

SPECIFICATION INFORMATION

MANUFACTURER: Stryker
MODEL #: SFS-2
DIMENSIONS: OR 3
DESCRIPTION: OR 3 Ceiling Mounted Anesthesia Boom; 2 Row, 2 Arm, 1 Air, 2 Vac, 1 N2O Gas, 2 O2, 1 WAGD Gas

FURNITURE & EQUIPMENT IMAGE

901 Montgomery Street
Decorah, IA 52101

PHONE 563-382-2911
FAX 563-387-3102

WinnMed

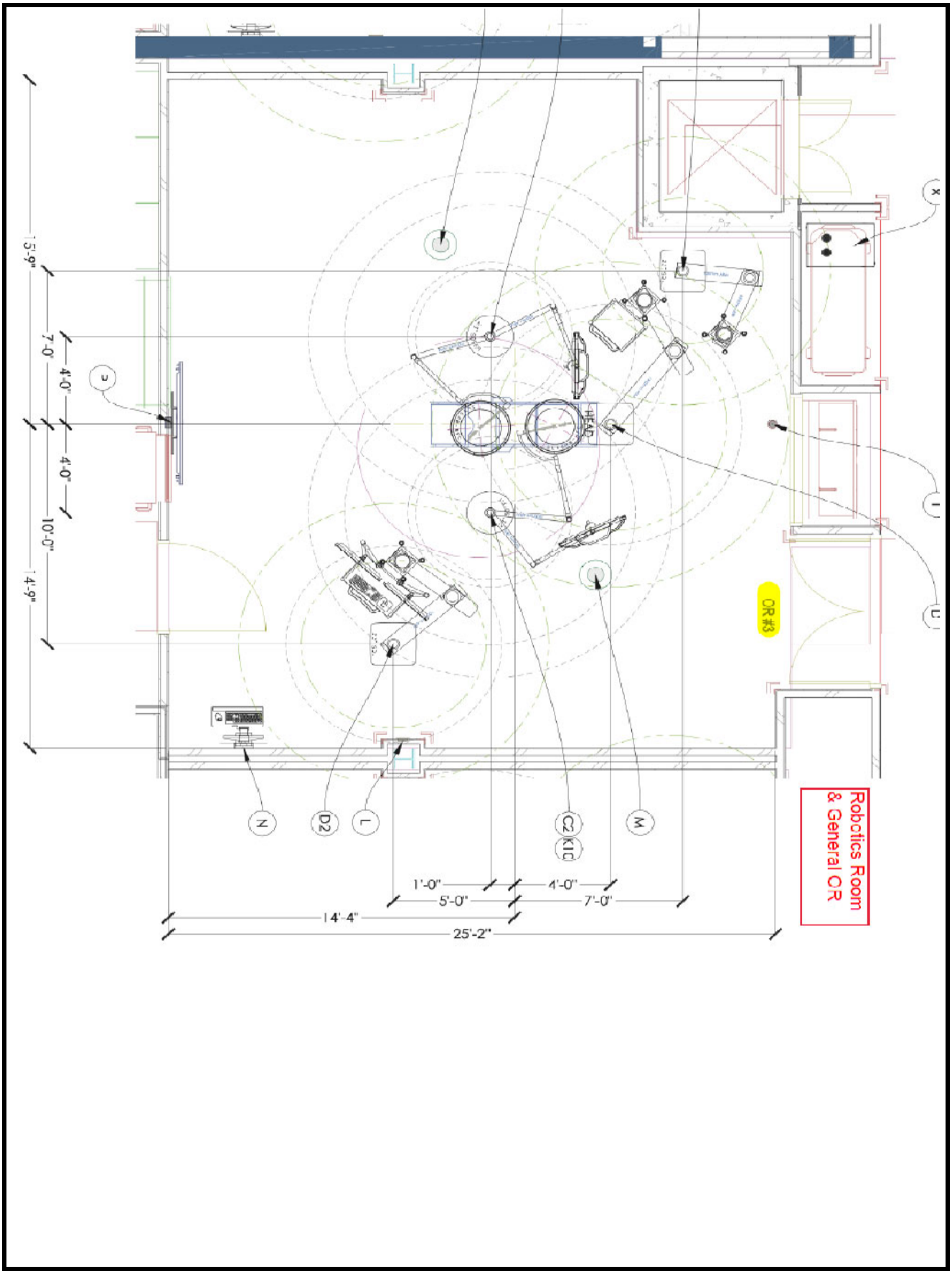

901 Montgomery Street
Decorah, IA 52101

PHONE 563-382-2911
FAX 563-387-3102

WinnMed

ORs 3 4 - Anesthesia Boom

Quote:10179648 Rev:4 Block#:1

stryker

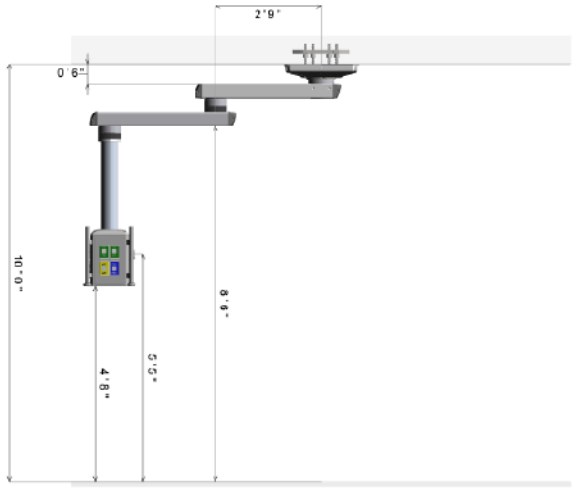

Suspension	
Brake System	Electric
Medical Rail Type	Fairfield
Top Arm Length	850mm
Bottom Arm Length	850mm
Column Tube Length	700mm
Weight Capacity (see note 4)	500 lbs.
Total Throat Used (%)	58
Gas Hose Length (ft)	13.56
Packaging Type	Lay Down
Manufacturing Notes	Assemble All MFR's

I confirm the ceiling height and agree with the dimensions as drawn. I confirm the equipment configuration as shown including arm lengths, platforms, gas key styles, brand, and locations; electronic, and low voltage selections and locations. I understand that any changes made after an order is in production will result in a change order fee and a delay in shipment.

CUSTOMER APPROVALS	SIGNATURE	PRINT NAME & TITLE	DATE
CLINICAL REPRESENTATIVE			
FACILITY ENGINEERING			

NOTES:

1. For weights, moments, and installation details, please refer to the Stryker Pre-installaton manuals.
2. It is the owners responsibility to provide the support structure to meet requirements listed in the Pre-install Manual.
3. Customer is responsibe for reviewing and approving Gas Key Style and Manufacturer.
4. Total weight capacity available for all Stryker and customer supplied accessories, based on weights moments listed in S-SERIES Pre-Install Manual.
5. Bottom of Stryker mounting plate must be installed at 3.0" above finished ceiling plane. All vertical boom dimensions shown in drawing are dependent on this requirement.

Stryker Communications
571 Silveson Blvd.
Flower Mound, TX 75028
PHONE: (877) 786-8106
E-FAX: (408) 754-2969
www.stryker.com

Sales Representative :
Brian Klipfel
brian.klipfel@stryker.com

Project:	
Customer: WINNESHIEK MED CTR	
City: DECORAH	State: Iowa
Equip ID: SFS-2	
Group Name: ORs 3 4	
Quote No.: 10179648	Quote Rev No.: 4
Quote Date: 15-Aug-2023	QTY: 2
Oracle Line #:	
DWG Rev No.: 4	Block #: 1
DWG No.: 10179648S001	

PHONE 563-382-2911
FAX 563-387-3102

901 Montgomery Street
Decorah, IA 52101

ORs 3 4 - Anesthesia Boom

Quote:10179648 Rev:4 Block#:1

stryker

10' 0"

FRONT

F1	3rd Party Data Plate 1G
F2	Distribution Bd
F3	20A/125V Duplex (4 Outlets)

RIGHT

R1	O2
R2	O2
R3	Med Air
R4	N2O

BACK

B1	20A/125V Duplex (4 Outlets)
B2	COR Lite 4-in-1 Plate
B3	20A/125V-5-20R Duplex

LEFT

L1	WAGD
L2	Blank
L3	VAC
L4	VAC

Data Communications

Qty	Description
1	1G Blank Plate
2	1G Blank W/String
1	Distribution Board
1	COR Lite 4-in-1 Plate

Gas Outlets

Qty	Gas Type	Key Style	Manufacturer
2	Oxygen (O2)	Chemtron	Beacon Medaes
1	Nitrous Oxide (N2O)	Chemtron	Beacon Medaes
1	Medical Air	Chemtron	Beacon Medaes
2	Vacuum	Chemtron	Beacon Medaes
1	WAGD	Chemtron	Beacon Medaes

High Voltage

Main Power Type	Isolated
Main Power Source	Emergency
Manufacturer	Leviton

Loc.	Circuit Ref #	# of Circuits	Color	Outlet Box	Description
F3	1	1	Red	A	20A/125V Duplex (4 Outlets)
B1	2	1	Red	A	20A/125V Duplex (4 Outlets)
B3	3	1	Red	A	20A/125V-5-20R Duplex

Circuits

Qty	Description
3	Total 15A/20A Circuits
1	Circuit for Motor and Brake

Multi-Functional Rail (MFR)

Front	406mm
Back	406mm
Control	Rear Only

I confirm the ceiling height and agree with the dimensions as drawn. I confirm the equipment configuration as shown including arm lengths, platforms, gas key styles, brand, and locations; electronic, and low voltage selections and locations. I understand that any changes made after an order is in production will result in a change order fee and a delay in shipment.

CUSTOMER APPROVALS	SIGNATURE	PRINT NAME & TITLE	DATE
CLINICAL REPRESENTATIVE			
FACILITY ENGINEERING			

NOTES:

1. For weights, moments, and installation details, please refer to the Stryker Pre-installation manuals.
2. It is the owners responsibility to provide the support structure to meet requirements listed in the Pre-install Manual.
3. Customer is responsible for reviewing and approving Gas Key Style and Manufacturer.
4. Total weight capacity available for all Stryker and customer supplied accessories, based on weights moments listed in S-SERIES Pre-Install Manual.
5. Bottom of Stryker mounting plate must be installed at 3.0" above finished ceiling plane. All vertical boom dimensions shown in drawing are dependent on this requirement.

Stryker Communications
571 Silveron Blvd
Flower Mound, TX 75028
PHONE: (877) 789-8108
E-FAX: (408) 754-2569
www.stryker.com

Sales Representative :
Brian Klipfel
brian.klipfel@stryker.com

Project:	
Customer: WINNESHIEK MED CTR	
City: DECORAH	State: Iowa
Equip ID: SFS-2	
Group Name: ORs 3 4	
Quote No.: 10179648	Quote Rev No.: 4
Quote Date: 15 Aug 2023	QTY: 2
Oracle Line #:	
DWG Rev No.: 4	Block #: 1
DWG No.: 10179648S001	

WinnMed

PHONE 563-382-2911
FAX 563-387-3102

901 Montgomery Street
Decorah, IA 52101

WinnMed

Room: ORs 3 4 | Anesthesia Boom

S-Series Standard Equipment Management System

Introducing a new standard in equipment management. With a completely redesigned user interface and a compact, fully customizable system, it has never been easier to manage your services and maneuver your equipment.

PART #	DESCRIPTION	QTY	LIST PRICE	EXT LIST PRICE
SFS-2	S-SERIES, STANDARD FIXED, 2 ROW, 2 ARM	2		

Mounting Details
- Mounting Plate: Single Common Plate
- Ceiling Cover: Standalone
- Brake System: Electric

MFR Configuration
- Front MFR Length: 406mm
- Rear MFR Length: 406mm
- MFR Controls: Rear Only

Shelves
- Shelves: 0

High Voltage Services
- 20A/125V-5-20R Duplex: 1
- 20A/125V Duplex (4 Outlets): 2

Low Voltage Services
- Blank Plate: 1
- 3rd Party Data Plate 1G Plate: 1
- Distribution Bd Plate: 1
- COR Lite 4-in-1 Plate: 1

Additional Cables

Gas Services
- Gas Manufacturer: Beacon Medaes
- Gas Fitting Type: Chemetron
- Air Gas: 1
- Vac Gas: 2
- N20 Gas: 1
- O2 Gas: 2
- WAGD Gas: 1

Configuration Total:

901 Montgomery Street
Decorah, IA 52101

PHONE 563-382-2911
FAX 563-387-3102

WinnMed

WinnMed **Issue Date:** **3/6/2024**
Expansion and Renovation
Decorah, IA 52101
Furniture Specifications

CONTACT: Ben Stevens - CFO
PHONE NUMBER: 563-387-3109

ITEM NUMBER:	44

ITEM NAME:	OR 4 Anesthesia Boom		
ROOM NUMBER:		**QUANTITY:**	

SPECIFICATION INFORMATION

MANUFACTURER: Stryker
MODEL #: SFS-2
DIMENSIONS: OR 4
DESCRIPTION: OR 4 Ceiling Mounted Anesthesia Boom; 2 Row, 2 Arm, 1 Air, 2 Vac, 1 N2O Gas, 2 O2, 1 WAGD Gas

FURNITURE & EQUIPMENT IMAGE

901 Montgomery Street
Decorah, IA 52101

PHONE 563-382-2911
FAX 563-387-3102

WinnMed

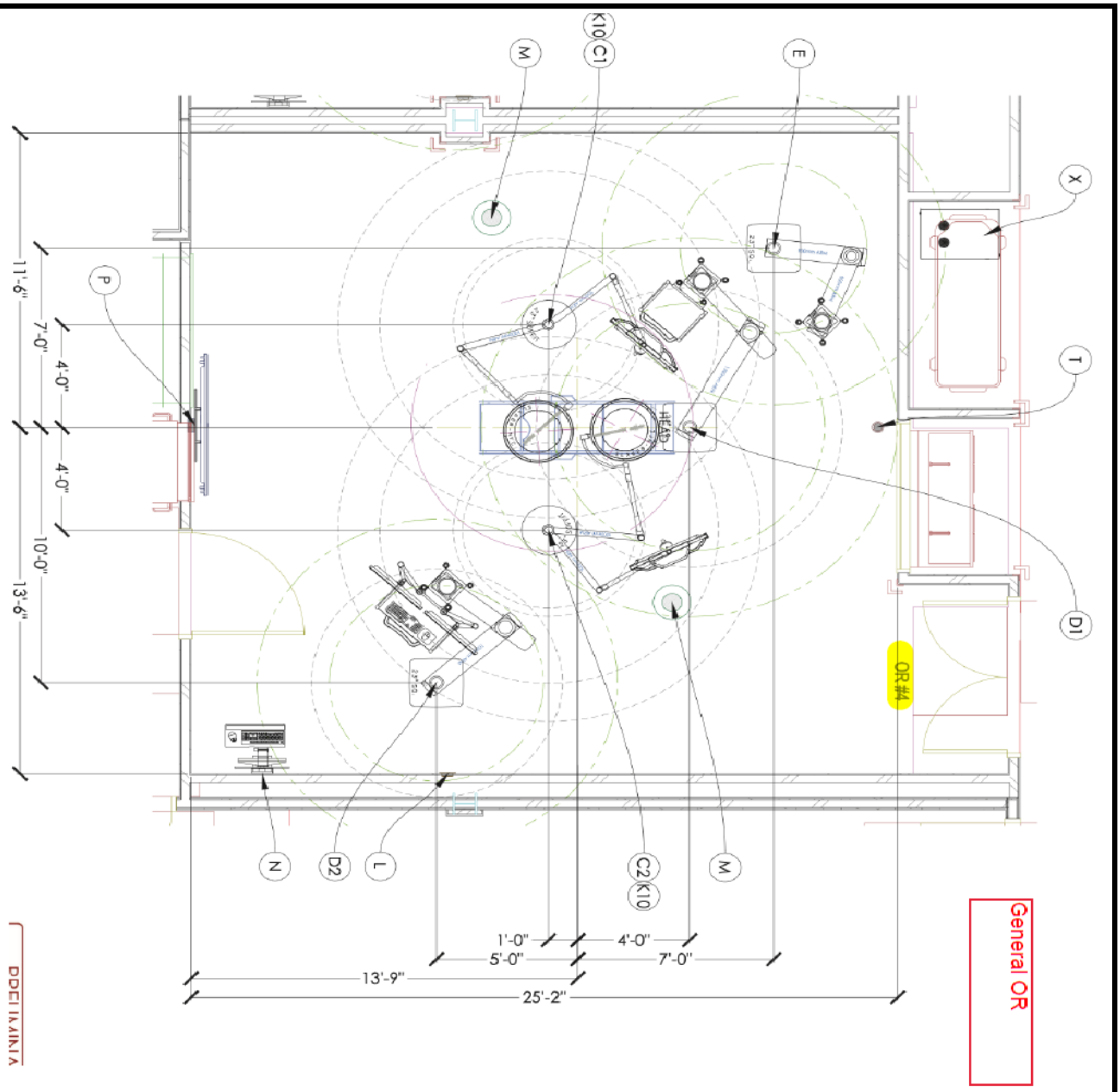

901 Montgomery Street
Decorah, IA 52101

PHONE 563-382-2911
FAX 563-387-3102

WinnMed

ORs 3 4 - Anesthesia Boom

Quote:10179648 Rev:4 Block#:1

stryker

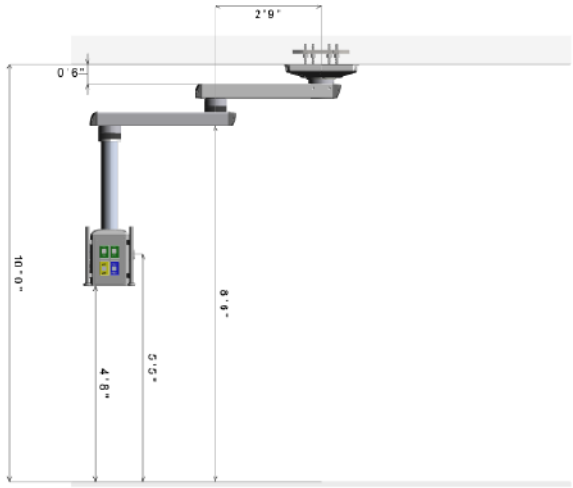

Suspension	
Brake System	Electric
Medical Rail Type	Fairfield
Top Arm Length	850mm
Bottom Arm Length	850mm
Column Tube Length	700mm
Weight Capacity (see note 4)	500 lbs.
Total Throat Used (%)	58
Gas Hose Length (ft)	13.56
Packaging Type	Lay Down
Manufacturing Notes	Assemble All MFR's

I confirm the ceiling height and agree with the dimensions as drawn. I confirm the equipment configuration as shown including arm lengths, platforms, gas key styles, brand, and locations; electronic, and low voltage selections and locations. I understand that any changes made after an order is in production will result in a change order fee and a delay in shipment.

CUSTOMER APPROVALS	SIGNATURE	PRINT NAME & TITLE	DATE
CLINICAL REPRESENTATIVE			
FACILITY ENGINEERING			

NOTES:

1. For weights, moments, and installation details, please refer to the Stryker Pre-installaton manuals.
2. It is the owners responsibility to provide the support structure to meet requirements listed in the Pre-install Manual.
3. Customer is responsibe for reviewing and approving Gas Key Style and Manufacturer.
4. Total weight capacity available for all Stryker and customer supplied accessories, based on weights moments listed in S-SERIES Pre-Install Manual.
5. Bottom of Stryker mounting plate must be installed at 3.0" above finished ceiling plane. All vertical boom dimensions shown in drawing are dependent on this requirement.

Stryker Communications
571 Silveson Blvd.
Flower Mound, TX 75028
PHONE: (877) 786-8106
E-FAX: (408) 754-2969
www.stryker.com

Sales Representative :
Brian Klipfel
brian.klipfel@stryker.com

Project:	
Customer: WINNESHIEK MED CTR	
City: DECORAH	State: Iowa
Equip ID: SFS-2	
Group Name: ORs 3 4	
Quote No.: 10179648	Quote Rev No.: 4
Quote Date: 15-Aug-2023	QTY: 2
Oracle Line #:	
DWG Rev No.: 4	Block #: 1
DWG No.: 10179648S001	

PHONE 563-382-2911
FAX 563-387-3102

901 Montgomery Street
Decorah, IA 52101

ORs 3 4 - Anesthesia Boom

Quote:10179648 Rev:4 Block#:1

stryker

10' 0"

FRONT

F1	3rd Party Data Plate 1G
F2	Distribution Bd
F3	20A/125V Duplex (4 Outlets)

RIGHT

R1	O2
R2	O2
R3	Med Air
R4	N2O

BACK

B1	20A/125V Duplex (4 Outlets)
B2	COR Lite 4-in-1 Plate
B3	20A/125V-5-20R Duplex

LEFT

L1	WAGD
L2	Blank
L3	VAC
L4	VAC

Data Communications

Qty	Description
1	1G Blank Plate
2	1G Blank W/String
1	Distribution Board
1	COR Lite 4-in-1 Plate

Gas Outlets

Qty	Gas Type	Key Style	Manufacturer
2	Oxygen (O2)	Chemtron	Beacon Medaes
1	Nitrous Oxide (N2O)	Chemtron	Beacon Medaes
1	Medical Air	Chemtron	Beacon Medaes
2	Vacuum	Chemtron	Beacon Medaes
1	WAGD	Chemtron	Beacon Medaes

High Voltage

Main Power Type	Isolated
Main Power Source	Emergency
Manufacturer	Leviton

Loc.	Circuit Ref #	# of Circuits	Color	Outlet Box	Description
F3	1	1	Red	A	20A/125V Duplex (4 Outlets)
B1	2	1	Red	A	20A/125V Duplex (4 Outlets)
B3	3	1	Red	A	20A/125V-5-20R Duplex

Circuits

Qty	Description
3	Total 15A/20A Circuits
1	Circuit for Motor and Brake

Multi-Functional Rail (MFR)

Front	406mm
Back	406mm
Control	Rear Only

I confirm the ceiling height and agree with the dimensions as drawn. I confirm the equipment configuration as shown including arm lengths, platforms, gas key styles, brand, and locations; electronic, and low voltage selections and locations. I understand that any changes made after an order is in production will result in a change order fee and a delay in shipment.

CUSTOMER APPROVALS	SIGNATURE	PRINT NAME & TITLE	DATE
CLINICAL REPRESENTATIVE			
FACILITY ENGINEERING			

NOTES:

1. For weights, moments, and installation details, please refer to the Stryker Pre-installation manuals.
2. It is the owners responsibility to provide the support structure to meet requirements listed in the Pre-install Manual.
3. Customer is responsible for reviewing and approving Gas Key Style and Manufacturer.
4. Total weight capacity available for all Stryker and customer supplied accessories, based on weights moments listed in S-SERIES Pre-Install Manual.
5. Bottom of Stryker mounting plate must be installed at 3.0" above finished ceiling plane. All vertical boom dimensions shown in drawing are dependent on this requirement.

Stryker Communications
571 Silveron Blvd
Flower Mound, TX 75028
PHONE: (877) 789-8108
E-FAX: (408) 754-2569
www.stryker.com

Sales Representative :
Brian Klipfel
brian.klipfel@stryker.com

Project:	
Customer: WINNESHIEK MED CTR	
City: DECORAH	State: Iowa
Equip ID: SFS-2	
Group Name: ORs 3 4	
Quote No.: 10179648	Quote Rev No.: 4
Quote Date: 15 Aug 2023	QTY: 2
Oracle Line #:	
DWG Rev No.: 4	Block #: 1
DWG No.: 10179648S001	

WinnMed

PHONE 563-382-2911
FAX 563-387-3102

901 Montgomery Street
Decorah, IA 52101

WinnMed

Room: ORs 3 4 | Anesthesia Boom

S-Series Standard Equipment Management System

Introducing a new standard in equipment management. With a completely redesigned user interface and a compact, fully customizable system, it has never been easier to manage your services and maneuver your equipment.

PART #	DESCRIPTION	QTY	LIST PRICE	EXT LIST PRICE
SFS-2	S-SERIES, STANDARD FIXED, 2 ROW, 2 ARM	2		

Mounting Details
- Mounting Plate: Single Common Plate
- Ceiling Cover: Standalone
- Brake System: Electric

MFR Configuration
- Front MFR Length: 406mm
- Rear MFR Length: 406mm
- MFR Controls: Rear Only

Shelves
- Shelves: 0

High Voltage Services
- 20A/125V-5-20R Duplex: 1
- 20A/125V Duplex (4 Outlets): 2

Low Voltage Services
- Blank Plate: 1
- 3rd Party Data Plate 1G Plate: 1
- Distribution Bd Plate: 1
- COR Lite 4-in-1 Plate: 1

Additional Cables

Gas Services
- Gas Manufacturer: Beacon Medaes
- Gas Fitting Type: Chemetron
- Air Gas: 1
- Vac Gas: 2
- N20 Gas: 1
- O2 Gas: 2
- WAGD Gas: 1

Configuration Total:

901 Montgomery Street
Decorah, IA 52101

PHONE 563-382-2911
FAX 563-387-3102

WinnMed

WinnMed **Issue Date:** **3/6/2024**
Expansion and Renovation
Decorah, IA 52101
Furniture Specifications

CONTACT: Ben Stevens - CFO
PHONE NUMBER: 563-387-3109

ITEM NUMBER:	45

ITEM NAME:	Endoscopic/Surgical Room Hub Base System		
ROOM NUMBER:		**QUANTITY:**	

SPECIFICATION INFORMATION

MANUFACTURER: Stryker
MODEL #: 240200100
DIMENSIONS:
DESCRIPTION: Endoscopic/Surgical Room Hub Base System

FURNITURE & EQUIPMENT IMAGE

Room: Stryker Endoscopy

Stryker Endoscopy

As a technology leader in minimally invasive surgery, Stryker offers comprehensive solutions to meet the changing needs of the high-tech operating room. We combine voice activation, advanced imaging, and high-definition video technology with a data management system to offer a surgical environment designed to improve patient outcomes. The combination of Stryker ' s market leading products and first class service has set a new standard in minimally invasive surgery.

PART #	DESCRIPTION	QTY	LIST PRICE	EXT LIST PRICE
0240200100	PKG, CONNECTED OR HUB BASE SYSTEM	5	[redacted]	
0240031300	PKG, 32" 4K OLED SURGICAL DISPLAY	10		
0240099265	PKG, DVI TO HDMI CONVERTER	2		
0240200103	CONNECTED OR HUB DEVICE CONTROL PACKAGE	5		
0240099250	PKG, S-V DEO/COMPOSITE TO HDMI CONVERTER	2		
0240031051	PKG, 32" 4K SURGICAL DISPLAY COVER	10		
0240200106	CONNECTED OR HUB DICOM PACKAGE	5		
Endoscopy Total:				

WinnMed

WinnMed **Issue Date:** **3/6/2024**
Expansion and Renovation
Decorah, IA 52101
Furniture Specifications

CONTACT: Ben Stevens - CFO
PHONE NUMBER: 563-387-3109

ITEM NUMBER:	46

ITEM NAME:	Surgical Display		
ROOM NUMBER:		**QUANTITY:**	

SPECIFICATION INFORMATION

MANUFACTURER: Stryker
MODEL #: 240031300
DIMENSIONS: 32"
DESCRIPTION: 32" OLED Surgical Display

FURNITURE & EQUIPMENT IMAGE

Room: Stryker Endoscopy

Stryker Endoscopy

As a technology leader in minimally invasive surgery, Stryker offers comprehensive solutions to meet the changing needs of the high-tech operating room. We combine voice activation, advanced imaging, and high-definition video technology with a data management system to offer a surgical environment designed to improve patient outcomes. The combination of Stryker ' s market leading products and first class service has set a new standard in minimally invasive surgery.

PART #	DESCRIPTION	QTY	LIST PRICE	EXT LIST PRICE
0240200100	PKG, CONNECTED OR HUB BASE SYSTEM	5	[redacted]	
0240031300	PKG, 32" 4K OLED SURGICAL DISPLAY	10		
0240099265	PKG, DVI TO HDMI CONVERTER	2		
0240200103	CONNECTED OR HUB DEVICE CONTROL PACKAGE	5		
0240099250	PKG, S-V DEO/COMPOSITE TO HDMI CONVERTER	2		
0240031051	PKG, 32" 4K SURGICAL DISPLAY COVER	10		
0240200106	CONNECTED OR HUB DICOM PACKAGE	5		
Endoscopy Total:				

WinnMed

WinnMed **Issue Date:** **3/6/2024**
Expansion and Renovation
Decorah, IA 52101
Furniture Specifications

CONTACT: Ben Stevens - CFO
PHONE NUMBER: 563-387-3109

ITEM NUMBER:	47

ITEM NAME:	Surgical Display Cover		
ROOM NUMBER:		**QUANTITY:**	

SPECIFICATION INFORMATION

MANUFACTURER: Stryker
MODEL #: 240031051
DIMENSIONS: 32"
DESCRIPTION: 32" Surgical Display Cover

FURNITURE & EQUIPMENT IMAGE

Room: Stryker Endoscopy

Stryker Endoscopy

As a technology leader in minimally invasive surgery, Stryker offers comprehensive solutions to meet the changing needs of the high-tech operating room. We combine voice activation, advanced imaging, and high-definition video technology with a data management system to offer a surgical environment designed to improve patient outcomes. The combination of Stryker ' s market leading products and first class service has set a new standard in minimally invasive surgery.

PART #	DESCRIPTION	QTY	LIST PRICE	EXT LIST PRICE
0240200100	PKG, CONNECTED OR HUB BASE SYSTEM	5	[redacted]	
0240031300	PKG, 32" 4K OLED SURGICAL DISPLAY	10		
0240099265	PKG, DVI TO HDMI CONVERTER	2		
0240200103	CONNECTED OR HUB DEVICE CONTROL PACKAGE	5		
0240099250	PKG, S-V DEO/COMPOSITE TO HDMI CONVERTER	2		
0240031051	PKG, 32" 4K SURGICAL DISPLAY COVER	10		
0240200106	CONNECTED OR HUB DICOM PACKAGE	5		
Endoscopy Total:				

WinnMed

WinnMed **Issue Date:** **3/6/2024**
Expansion and Renovation
Decorah, IA 52101
Furniture Specifications

CONTACT: Ben Stevens - CFO
PHONE NUMBER: 563-387-3109

ITEM NUMBER:	48

ITEM NAME:	DVI to HDMI Converter		
ROOM NUMBER:		**QUANTITY:**	

SPECIFICATION INFORMATION

MANUFACTURER: Stryker
MODEL #: 240099265
DIMENSIONS:
DESCRIPTION: DVI to HDMI Converter

FURNITURE & EQUIPMENT IMAGE

Room: Stryker Endoscopy

Stryker Endoscopy

As a technology leader in minimally invasive surgery, Stryker offers comprehensive solutions to meet the changing needs of the high-tech operating room. We combine voice activation, advanced imaging, and high-definition video technology with a data management system to offer a surgical environment designed to improve patient outcomes. The combination of Stryker ' s market leading products and first class service has set a new standard in minimally invasive surgery.

PART #	DESCRIPTION	QTY	LIST PRICE	EXT LIST PRICE
0240200100	PKG, CONNECTED OR HUB BASE SYSTEM	5	[redacted]	
0240031300	PKG, 32" 4K OLED SURGICAL DISPLAY	10		
0240099265	PKG, DVI TO HDMI CONVERTER	2		
0240200103	CONNECTED OR HUB DEVICE CONTROL PACKAGE	5		
0240099250	PKG, S-V DEO/COMPOSITE TO HDMI CONVERTER	2		
0240031051	PKG, 32" 4K SURGICAL DISPLAY COVER	10		
0240200106	CONNECTED OR HUB DICOM PACKAGE	5		
Endoscopy Total:				

WinnMed

WinnMed **Issue Date:** **3/6/2024**
Expansion and Renovation
Decorah, IA 52101
Furniture Specifications

CONTACT: Ben Stevens - CFO
PHONE NUMBER: 563-387-3109

ITEM NUMBER:	49

ITEM NAME:	S-Video/Composite to HDMI Converter		
ROOM NUMBER:		**QUANTITY:**	

SPECIFICATION INFORMATION

MANUFACTURER: Stryker
MODEL #: 240099250
DIMENSIONS:
DESCRIPTION: S-Video/Composite to HDMI Converter

FURNITURE & EQUIPMENT IMAGE

Room: Stryker Endoscopy

Stryker Endoscopy

As a technology leader in minimally invasive surgery, Stryker offers comprehensive solutions to meet the changing needs of the high-tech operating room. We combine voice activation, advanced imaging, and high-definition video technology with a data management system to offer a surgical environment designed to improve patient outcomes. The combination of Stryker ' s market leading products and first class service has set a new standard in minimally invasive surgery.

PART #	DESCRIPTION	QTY	LIST PRICE	EXT LIST PRICE
0240200100	PKG, CONNECTED OR HUB BASE SYSTEM	5	[redacted]	
0240031300	PKG, 32" 4K OLED SURGICAL DISPLAY	10		
0240099265	PKG, DVI TO HDMI CONVERTER	2		
0240200103	CONNECTED OR HUB DEVICE CONTROL PACKAGE	5		
0240099250	PKG, S-VIDEO/COMPOSITE TO HDMI CONVERTER	2		
0240031051	PKG, 32" 4K SURGICAL DISPLAY COVER	10		
0240200106	CONNECTED OR HUB DICOM PACKAGE	5		
Endoscopy Total:				

WinnMed

WinnMed **Issue Date:** **3/6/2024**
Expansion and Renovation
Decorah, IA 52101
Furniture Specifications

CONTACT: Ben Stevens - CFO
PHONE NUMBER: 563-387-3109

ITEM NUMBER:	50

ITEM NAME:	Device Control Package		
ROOM NUMBER:		**QUANTITY:**	

SPECIFICATION INFORMATION

MANUFACTURER: Stryker
MODEL #: 240200103
DIMENSIONS:
DESCRIPTION: Endoscopic/Surgical Room Hub Device Control Package

FURNITURE & EQUIPMENT IMAGE

Room: Stryker Endoscopy

Stryker Endoscopy

As a technology leader in minimally invasive surgery, Stryker offers comprehensive solutions to meet the changing needs of the high-tech operating room. We combine voice activation, advanced imaging, and high-definition video technology with a data management system to offer a surgical environment designed to improve patient outcomes. The combination of Stryker ' s market leading products and first class service has set a new standard in minimally invasive surgery.

PART #	DESCRIPTION	QTY	LIST PRICE	EXT LIST PRICE
0240200100	PKG, CONNECTED OR HUB BASE SYSTEM	5	[redacted]	
0240031300	PKG, 32" 4K OLED SURGICAL DISPLAY	10		
0240099265	PKG, DVI TO HDMI CONVERTER	2		
0240200103	CONNECTED OR HUB DEVICE CONTROL PACKAGE	5		
0240099250	PKG, S-V DEO/COMPOSITE TO HDMI CONVERTER	2		
0240031051	PKG, 32" 4K SURGICAL DISPLAY COVER	10		
0240200106	CONNECTED OR HUB DICOM PACKAGE	5		
Endoscopy Total:				

WinnMed

WinnMed **Issue Date:** **3/6/2024**
Expansion and Renovation
Decorah, IA 52101
Furniture Specifications

CONTACT: Ben Stevens - CFO
PHONE NUMBER: 563-387-3109

ITEM NUMBER:	51

ITEM NAME:	Endoscopic/Surgical Room Hub Dicom Package		
ROOM NUMBER:		**QUANTITY:**	

SPECIFICATION INFORMATION

MANUFACTURER: Stryker
MODEL #: 240200106
DIMENSIONS:
DESCRIPTION: Endoscopic/Surgical Room Hub Dicom Package

FURNITURE & EQUIPMENT IMAGE

Room: Stryker Endoscopy

Stryker Endoscopy

As a technology leader in minimally invasive surgery, Stryker offers comprehensive solutions to meet the changing needs of the high-tech operating room. We combine voice activation, advanced imaging, and high-definition video technology with a data management system to offer a surgical environment designed to improve patient outcomes. The combination of Stryker ' s market leading products and first class service has set a new standard in minimally invasive surgery.

PART #	DESCRIPTION	QTY	LIST PRICE	EXT LIST PRICE
0240200100	PKG, CONNECTED OR HUB BASE SYSTEM	5	[redacted]	
0240031300	PKG, 32" 4K OLED SURGICAL DISPLAY	10		
0240099265	PKG, DVI TO HDMI CONVERTER	2		
0240200103	CONNECTED OR HUB DEVICE CONTROL PACKAGE	5		
0240099250	PKG, S-V DEO/COMPOSITE TO HDMI CONVERTER	2		
0240031051	PKG, 32" 4K SURGICAL DISPLAY COVER	10		
0240200106	CONNECTED OR HUB DICOM PACKAGE	5		
Endoscopy Total:				

WinnMed

WinnMed **Issue Date:** **3/6/2024**
Expansion and Renovation
Decorah, IA 52101
Furniture Specifications

CONTACT: Ben Stevens - CFO
PHONE NUMBER: 563-387-3109

ITEM NUMBER:	52

ITEM NAME:	BLANK		
ROOM NUMBER:		**QUANTITY:**	

SPECIFICATION INFORMATION	

MANUFACTURER:
MODEL #:
DIMENSIONS:
DESCRIPTION:

FURNITURE & EQUIPMENT IMAGE

WinnMed

WinnMed **Issue Date:** **3/6/2024**
Expansion and Renovation
Decorah, IA 52101
Furniture Specifications

CONTACT: Ben Stevens - CFO
PHONE NUMBER: 563-387-3109

ITEM NUMBER:	53

ITEM NAME:	BLANK		
ROOM NUMBER:		**QUANTITY:**	

SPECIFICATION INFORMATION	

MANUFACTURER:
MODEL #:
DIMENSIONS:
DESCRIPTION:

FURNITURE & EQUIPMENT IMAGE

WinnMed

WinnMed **Issue Date:** **3/6/2024**
Expansion and Renovation
Decorah, IA 52101
Furniture Specifications

CONTACT: Ben Stevens - CFO
PHONE NUMBER: 563-387-3109

ITEM NUMBER:	54

ITEM NAME:	BLANK		
ROOM NUMBER:		**QUANTITY:**	

SPECIFICATION INFORMATION	

MANUFACTURER:
MODEL #:
DIMENSIONS:
DESCRIPTION:

FURNITURE & EQUIPMENT IMAGE

WinnMed

WinnMed **Issue Date:** **3/6/2024**
Expansion and Renovation
Decorah, IA 52101
Furniture Specifications

CONTACT: Ben Stevens - CFO
PHONE NUMBER: 563-387-3109

ITEM NUMBER:	55

ITEM NAME:	Infant Security System		
ROOM NUMBER:		**QUANTITY:**	

SPECIFICATION INFORMATION

MANUFACTURER: RF Technologies
MODEL #: Safe Place Infant/Patient Security System
DIMENSIONS:
DESCRIPTION: Infant Security Systems; Server Enterprise software; Staff Alert Panel; (3) Double Door Systems; (12) Alarming Band Receivers w/ Antennas

FURNITURE & EQUIPMENT IMAGE

WinnMed

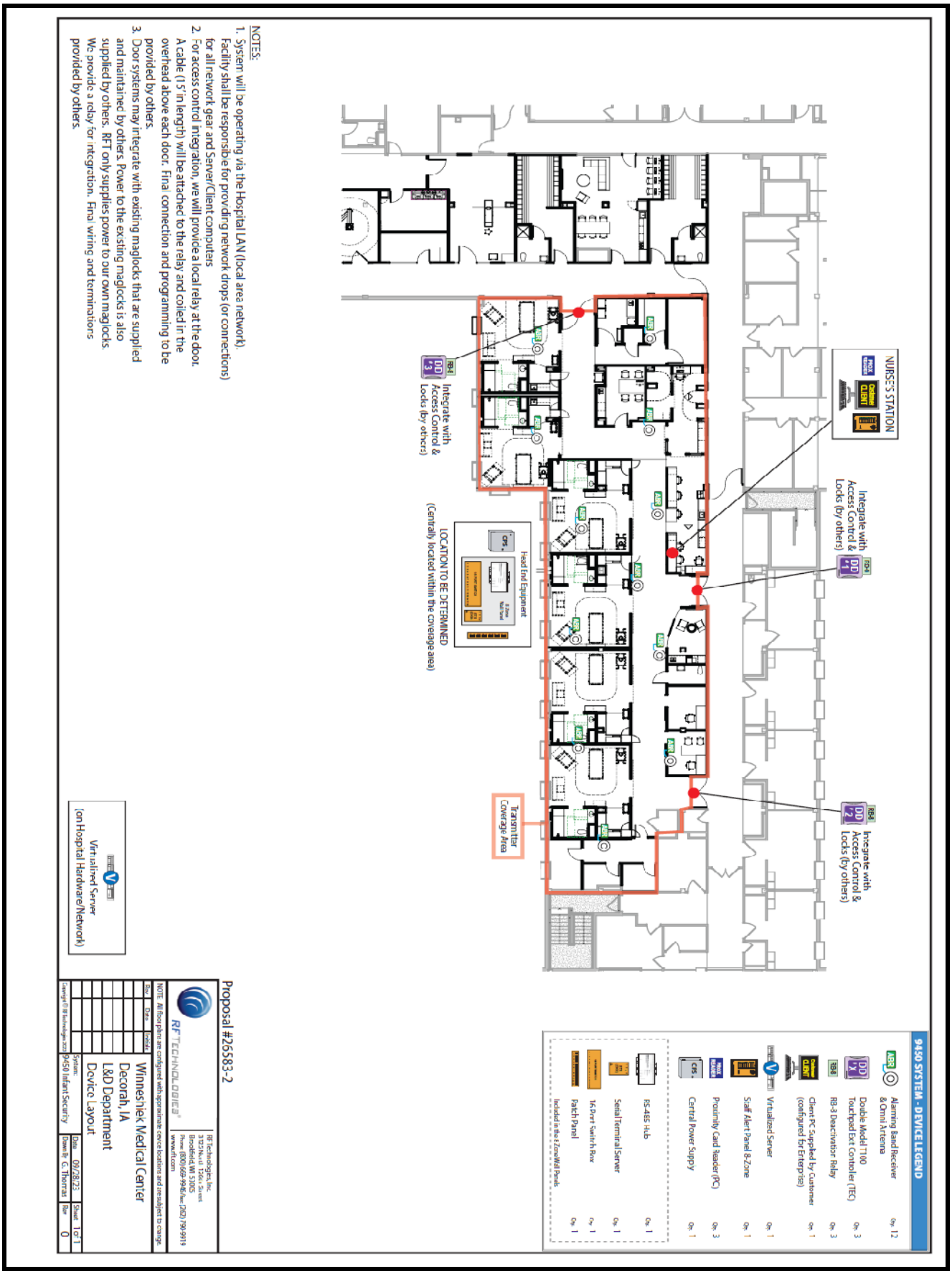

901 Montgomery Street
Decorah, IA 52101

PHONE 563-382-2911
FAX 563-387-3102

WinnMed

RFTECHNOLOGIES®

Proposal

Safe Place® Infant and Pediatric Security Solution
L&D Department

Customer ID:		Created For:	Brianne Leikvold, Director of Obstetrics
Proposal #:			Winneshiek Medical Center
Discount Applied:			901 MONTGOMERY ST
Proposal Date:			Decorah, IA 52101
Valid Until:			Phone: (563) 387-3012
Account Manager:			Email: leikvoldb@winmedical.org

Proposal Details

Quantity		System Components	Unit Price	Amount
		Computer Hardware, Software, Licenses & Accessories		
		Computer Hardware		
1	0910-0297	Safe Place Enterprise Server Software Virtualization		
		System Software		
1	0880-0108	Safe Place Enterprise Server Software		
1	0880-0114	Safe Place Infant Security Module		
1	3000-0366	Safe Place Enterprise Desktop Client Configuration		
		System Licenses		
1	9450-9450	Facility Layout PNG		
		PC Accessories		
1	0910-0075	Configured USB HID Prox Reader for PC		
		Network Gear		
1	9450-9215K	8 Zone Network Wall Panel (CAT-5) Kit		
		Cut-Band Solution		
		Alarming Band Receivers		
12	9450-0204K	9450 MB Alarming Band Receiver w/Circular Antenna		
		T100 Touchpad Exit Controllers		
3	9450-1173-FK	Safe Place Model T100, Double Door, NFPA, Flush Mount (UL)		
		Controller Accessory Parts		
3	0290-0033	Relay, Lifesafety Power RB8 Dual 2A, 12VDC/24VDC		
3	0220-0297	Box, Flush Mount, TEC, Existing Construction		
		Event Notification		
		Staff Alert Panels		
1	9450-1400K	Safe Place 8-Zone Staff Alert Panel, Flush Mt		
		Infrastructure		
		Central Power Supplies		
1	9450-0555	Central Power Supply, 15VDC 9A, Class II (UL Listed)		
		Wire		
2	0100-0029K	Wire, CAT-5e Plenum, Pink 1000 Ft Roll		
2	0100-0030K	Wire, 16/2 Unshielded Plenum, Stranded, 500 ft Kit		
2	0100-0047K	Wire, 16/4 Unshielded Plenum, Stranded, 500 ft Kit		
		Supplies & Manuals		
		Transmitters		
10	9450-6262-1	Smart Sense Infant Transmitter 262 kHz		
3	3000-0245	Safe Place Smart Sense Plus Banding		
10	0220-0265	Clamp, Smart Sense Infant TX		
2	0900-0006	Cleaning Brush for ICSS Transmitters		
1	9400-0550	Transmitter Storage Case		
1	9450-0050	RFT Transmitter Tester - 66kHz & 262kHz		

WinnMed

		Training/User Guides
1	0510-0570	Smart Sense Transmitter Quick Reference
1	0510-0572	Transmitter Testing Quick Reference
20	0510-1114	Safe Place Enterprise Users Guide
1	0510-1115	Touchpad Exit Controller Quick Reference
1	0510-1120	Touchpad Exit Controller Administration Guide
1	0510-0164	Door Controller (TEC/DEEAC) Configuration/Program Settings

Supplies & Manuals Total:

		Clinical Education
1	3000-3401	Clinical Education New System Installation Schedule 1

Clinical Education Total:

		Installation
		Installation Type
1	3000-3005	RFT Installation Project
		Add-On Services
1	3000-3004	Project Management
1	0550-0492	Remote Access Configuration
		Infection Control
1	3000-0680	Infection Control, Class I

Installation Total:

Total Price:
***Estimated Freight:**
***Estimated Tax:**
Estimated Total:

*Customer is responsible for all applicable taxes and freight at time of order

901 Montgomery Street
Decorah, IA 52101

PHONE 563-382-2911
FAX 563-387-3102

WinnMed

WinnMed **Issue Date:** **3/6/2024**
Expansion and Renovation
Decorah, IA 52101
Furniture Specifications

CONTACT: Ben Stevens - CFO
PHONE NUMBER: 563-387-3109

ITEM NUMBER:	56

ITEM NAME:	BLANK		
ROOM NUMBER:		**QUANTITY:**	

SPECIFICATION INFORMATION	

MANUFACTURER:
MODEL #:
DIMENSIONS:
DESCRIPTION:

FURNITURE & EQUIPMENT IMAGE

901 Montgomery Street
Decorah, IA 52101

PHONE 563-382-2911
FAX 563-387-3102

WinnMed

WinnMed **Issue Date:** **3/6/2024**
Expansion and Renovation
Decorah, IA 52101
Furniture Specifications

CONTACT: Ben Stevens - CFO
PHONE NUMBER: 563-387-3109

ITEM NUMBER:	57

ITEM NAME:	BLANK		
ROOM NUMBER:		**QUANTITY:**	

SPECIFICATION INFORMATION	

MANUFACTURER:
MODEL #:
DIMENSIONS:
DESCRIPTION:

FURNITURE & EQUIPMENT IMAGE

901 Montgomery Street
Decorah, IA 52101

PHONE 563-382-2911
FAX 563-387-3102

WinnMed

WinnMed **Issue Date:** **3/6/2024**
Expansion and Renovation
Decorah, IA 52101
Furniture Specifications

CONTACT: Ben Stevens - CFO
PHONE NUMBER: 563-387-3109

ITEM NUMBER:	58

ITEM NAME:	Clinic Exam Chairs		
ROOM NUMBER:		**QUANTITY:**	

SPECIFICATION INFORMATION

MANUFACTURER: Midmark
MODEL #: MIM626005
DIMENSIONS:
DESCRIPTION: Clinic Exam Chairs; Drawer Heater; Foot and Hand Wired Controls; 650 lbs weight capacity; Active Sensing technology pauses movement when a disrupting impact is detected; One-Touch return to home; 115 VAC, 10 A, 50/60 Hz

FURNITURE & EQUIPMENT IMAGE

901 Montgomery Street
Decorah, IA 52101

PHONE 563-382-2911
FAX 563-387-3102

WinnMed

WinnMed **Issue Date:** **3/6/2024**
Expansion and Renovation
Decorah, IA 52101
Furniture Specifications

CONTACT: Ben Stevens - CFO
PHONE NUMBER: 563-387-3109

ITEM NUMBER:	59

ITEM NAME:	Clinic Exam Chair Support Rails		
ROOM NUMBER:		**QUANTITY:**	

SPECIFICATION INFORMATION	
MANUFACTURER:	Midmark
MODEL #:	MIM9A600002
DIMENSIONS:	
DESCRIPTION:	Clinic Exam Chair Support Rails; 500 lbs capacity; Field Installed

FURNITURE & EQUIPMENT IMAGE

901 Montgomery Street
Decorah, IA 52101

PHONE 563-382-2911
FAX 563-387-3102

WinnMed

WinnMed **Issue Date:** **3/6/2024**
Expansion and Renovation
Decorah, IA 52101
Furniture Specifications

CONTACT: Ben Stevens - CFO
PHONE NUMBER: 563-387-3109

ITEM NUMBER:	60

ITEM NAME:	Clinic Exam Chair Premium Upholstered Top Upgrade		
ROOM NUMBER:		**QUANTITY:**	

SPECIFICATION INFORMATION

MANUFACTURER: Midmark
MODEL #: MIM0022000814
DIMENSIONS:
DESCRIPTION: EXAM CHAIR ACCESSORIES: PREMIUM UPHOLSTERED TOP FOR 626 EXAM CHAIR, 28", STONE

FURNITURE & EQUIPMENT IMAGE

901 Montgomery Street
Decorah, IA 52101

PHONE 563-382-2911
FAX 563-387-3102

WinnMed

WinnMed **Issue Date:** **3/6/2024**
Expansion and Renovation
Decorah, IA 52101
Furniture Specifications

CONTACT: Ben Stevens - CFO
PHONE NUMBER: 563-387-3109

ITEM NUMBER:	61

ITEM NAME:	Clinic Procedure Chair		
ROOM NUMBER:		**QUANTITY:**	

SPECIFICATION INFORMATION

MANUFACTURER: Midmark
MODEL #: MIM230001
DIMENSIONS:
DESCRIPTION: Clinic Procedure Chair; Foot & Hand Pedal; Swing Away Intrument Tray; Premium Upholstered Top Upgrade; 450 lbs. weight capacity; 115 VAC, 10 A, 50/60 Hz; LED Exam Light; Vision Block Screen; Articulating Knee Crutches

FURNITURE & EQUIPMENT IMAGE

901 Montgomery Street
Decorah, IA 52101

PHONE 563-382-2911
FAX 563-387-3102

WinnMed

Articulating Knee Crutches

Swing Arm Instrument Tray

Ritter® 253 LED Exam Light

Vision Block Screen

901 Montgomery Street
Decorah, IA 52101

PHONE 563-382-2911
FAX 563-387-3102

WinnMed

WinnMed **Issue Date:** **3/6/2024**
Expansion and Renovation
Decorah, IA 52101
Furniture Specifications

CONTACT: Ben Stevens - CFO
PHONE NUMBER: 563-387-3109

ITEM NUMBER:	62

ITEM NAME:	BLANK		
ROOM NUMBER:		**QUANTITY:**	

SPECIFICATION INFORMATION	

MANUFACTURER:
MODEL #:
DIMENSIONS:
DESCRIPTION:

FURNITURE & EQUIPMENT IMAGE

901 Montgomery Street
Decorah, IA 52101

PHONE 563-382-2911
FAX 563-387-3102

WinnMed

WinnMed **Issue Date:** **3/6/2024**
Expansion and Renovation
Decorah, IA 52101
Furniture Specifications

CONTACT: Ben Stevens - CFO
PHONE NUMBER: 563-387-3109

ITEM NUMBER:	63

ITEM NAME:	BLANK		
ROOM NUMBER:		**QUANTITY:**	

SPECIFICATION INFORMATION	

MANUFACTURER:
MODEL #:
DIMENSIONS:
DESCRIPTION:

FURNITURE & EQUIPMENT IMAGE

901 Montgomery Street
Decorah, IA 52101

PHONE 563-382-2911
FAX 563-387-3102

WinnMed

WinnMed **Issue Date:** **3/6/2024**
Expansion and Renovation
Decorah, IA 52101
Furniture Specifications

CONTACT: Ben Stevens - CFO
PHONE NUMBER: 563-387-3109

ITEM NUMBER:	64

ITEM NAME:	Pass-Through Cabinets		
ROOM NUMBER:		**QUANTITY:**	

SPECIFICATION INFORMATION

MANUFACTURER: Unicas Medical
MODEL #: Type E Pass-Through
DIMENSIONS: 55" W x 60" H x 22.75" D
DESCRIPTION: Stainless Steel Pass-Through Cabinets; 55" W x 60" H x 22.75" D; Sliding Glass Door Surgery Room Side; Door Handle Sterile Hall Side; Accepts Type Unicas Supply Tray System; Includes Type EU interior plastic supply panels; Trim Included

FURNITURE & EQUIPMENT IMAGE

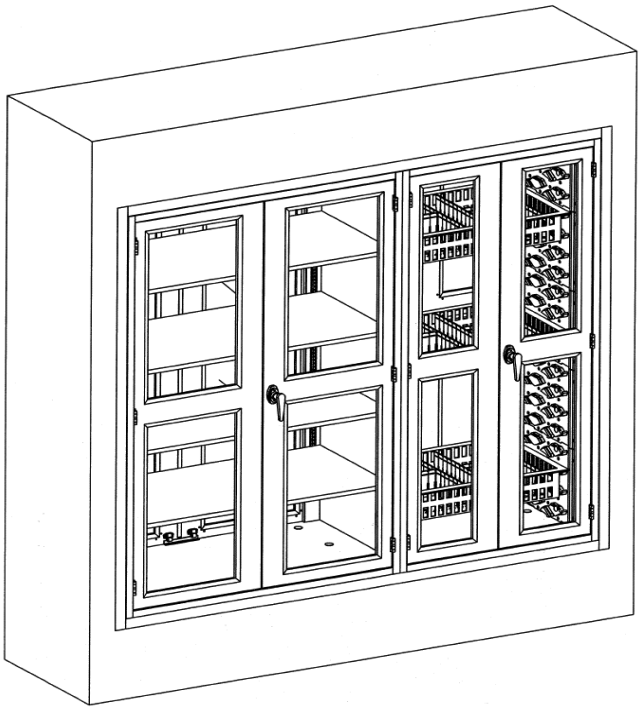

901 Montgomery Street
Decorah, IA 52101

PHONE 563-382-2911
FAX 563-387-3102

WinnMed

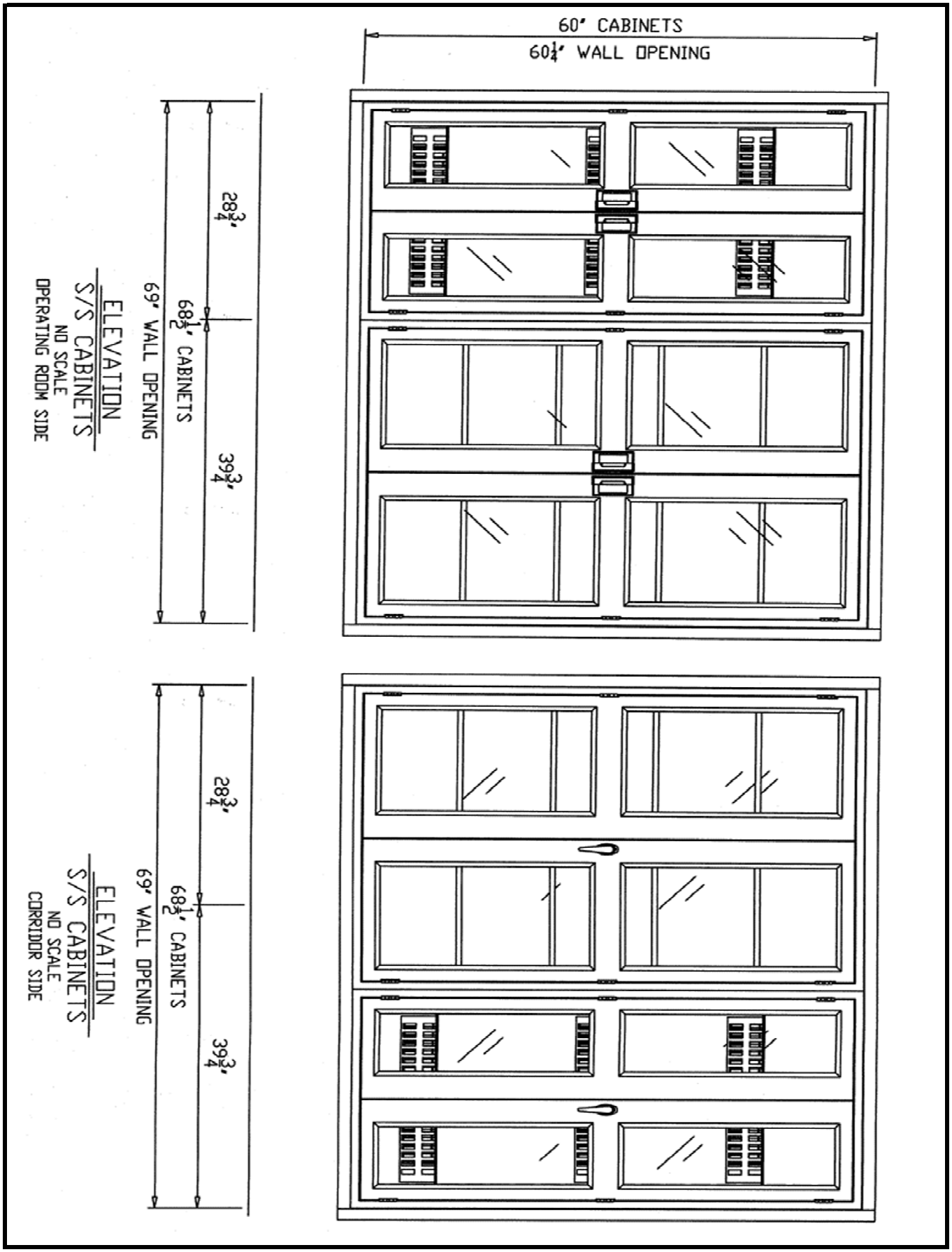

901 Montgomery Street
Decorah, IA 52101

PHONE 563-382-2911
FAX 563-387-3102

WinnMed

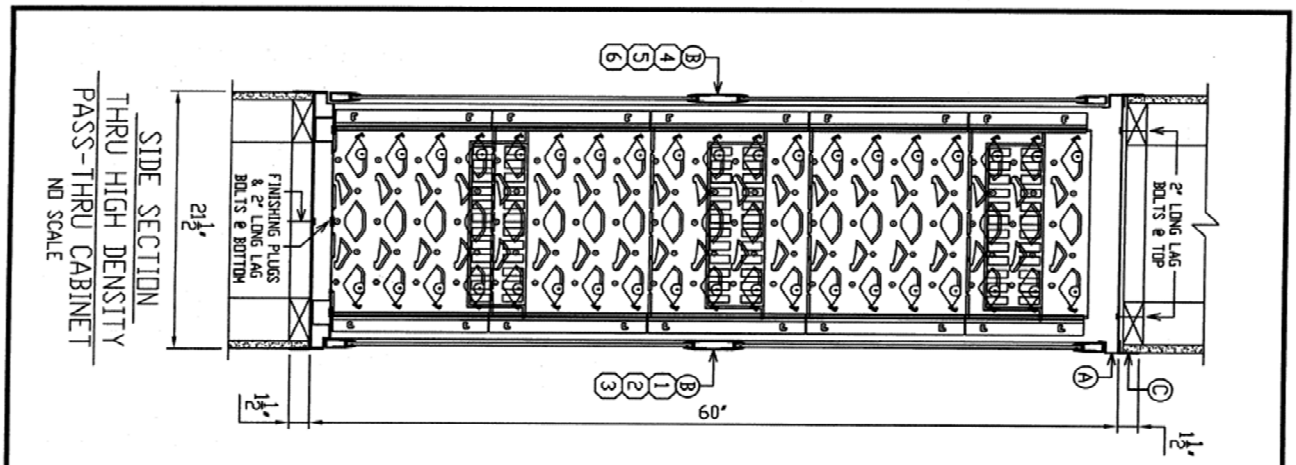

SIDE SECTION
THRU HIGH DENSITY PASS-THRU CABINET
NO SCALE

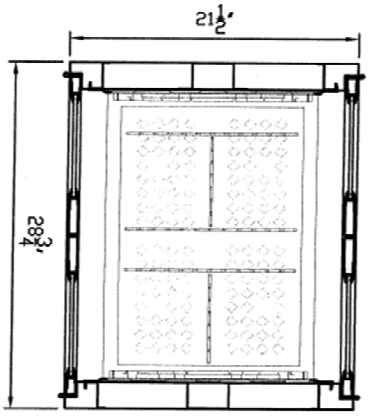

PLAN SECTION
THRU HIGH DENSITY PASS-THRU CABINET
NO SCALE

COMPONENT LIST

NO.	QTY.	DESCRIPTION
1	-	GUDEN #800020718 FIVE KNUCKLE S/S BUTT HINGE.
2	1	C.H.G. #P63-1012 - S/S RECESSED PULL, FULL GRIP, WITH FRAME BEVELED EDGE.
3	-	AMEROCK #CM9823-B2G SPRING LOADED NYLON ROLLER CATCH.
4	-	AUSTIN #20062-1/2 "L" CHROME PLATED HANDLE.
5	-	EBERHARD #5611-R ZINC PLATED DEAD BOLT LATCH.
6	-	CLOSED CELL NEOPRENE GASKET.

MATERIAL LIST

LETTER	PART	FABRICATION NOTES
C	TRIM	#18 GA. (T-304) S/S WITH A NO. 4 BRUSHED SATIN FINISH.
B	GLASS DOOR	#18 GA. (T-304) S/S EXT. #20 GA. (T-304) S/S INT. WITH 1/4" THICK TEMPERED GLASS.
A	CABI NET	#18 GA. (T-304) S/S WITH A NO. 4 BRUSHED SATIN FINISH.

901 Montgomery Street
Decorah, IA 52101

PHONE 563-382-2911
FAX 563-387-3102

WinnMed

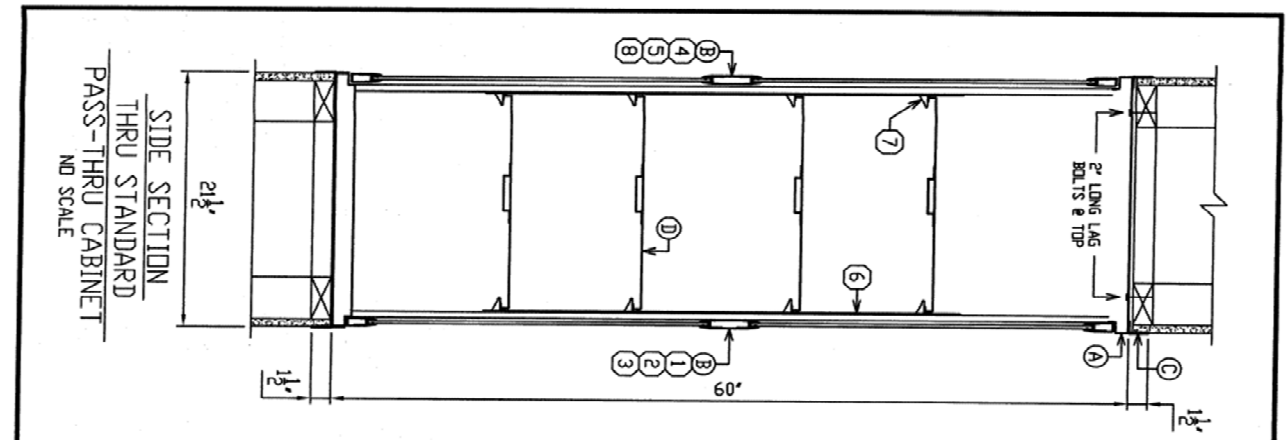

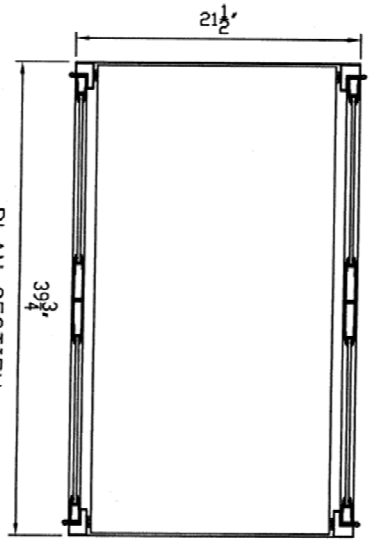

COMPONENT LIST

NO.	QTY.	DESCRIPTION
1	-	GUDEN #800020071B FIVE KNUCKLE S/S BUTT HINGE.
2	-	C.H.G. #P63-1012 - S/S RECESSED PULL, FULL GRIP, WITH FRAME BEVELED EDGE.
3	-	AMEROCK #CM9823-B2G SPRING LOADED NYLON ROLLER CATCH.
4	-	AUSTIN #20062-1/2 'L' CHROME PLATED HANDLE.
5	-	EBERHARD #5611-R ZINC PLATED DEAD BOLT LATCH.
6	-	C.H.G. #T21-1024 KEYHOLE TYPE PILASTER.
7	-	C.H.G. #T30-5030 S/S SNAP-IN SHELF SUPPORTS.
8	-	CLOSED CELL NEOPRENE GASKET.

MATERIAL LIST

LETTER	PART	FABRICATION NOTES
D	REMOV ADJ. SHELF	#18 GA. (T-304) S/S WITH A NO. 4 BRUSHED SATIN FINISH, REINFORCED WITH #18 GA. S/S HAT SECTIONS.
C	TRIM	#18 GA. (T-304) S/S WITH A NO. 4 BRUSHED SATIN FINISH.
B	GLASS DOOR	#18 GA. (T-304) S/S EXT. #20 GA. (T-304) S/S INT. WITH 1/4" THICK TEMPERED GLASS.
A	CABI NET	#18 GA. (T-304) S/S WITH A NO. 4 BRUSHED SATIN FINISH.

901 Montgomery Street
Decorah, IA 52101

PHONE 563-382-2911
FAX 563-387-3102

WinnMed

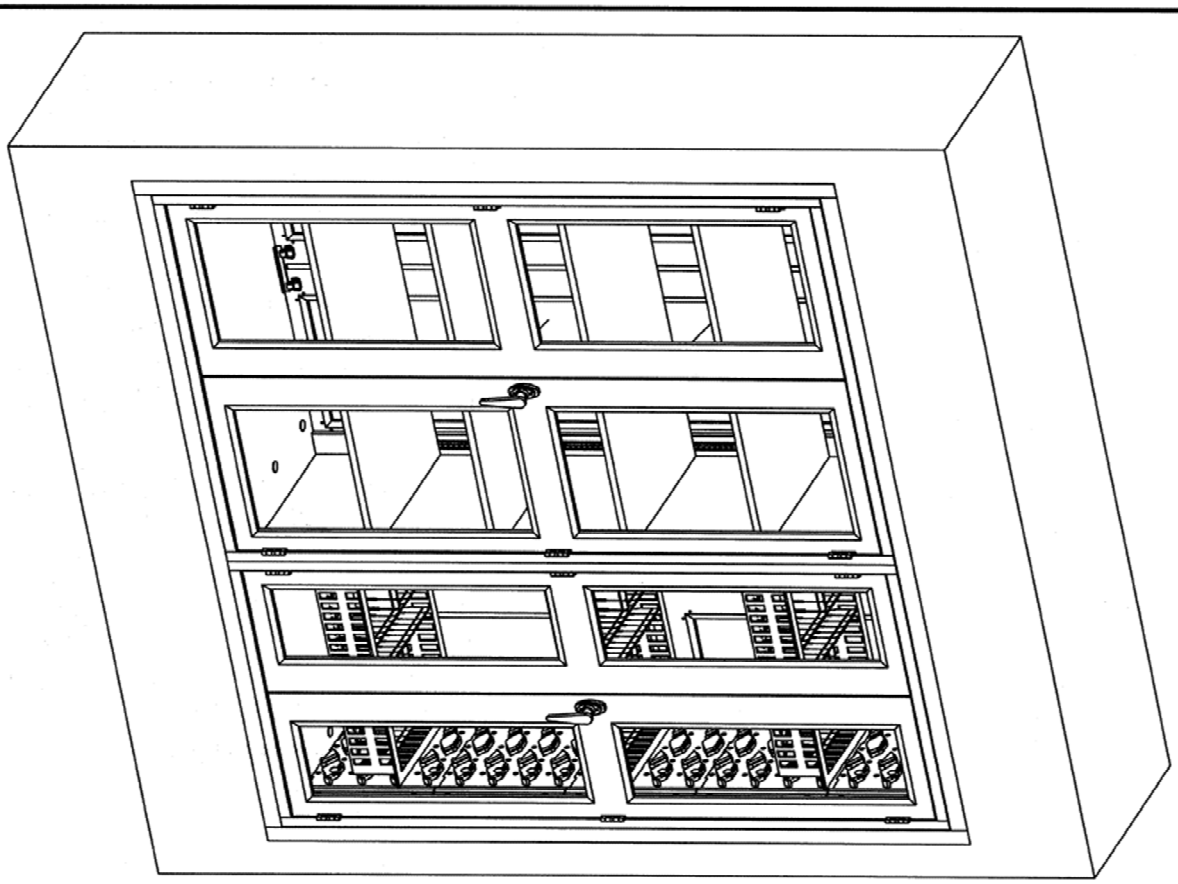

ISOMETRIC
S/S CABINETS
(8) SETS REQUIRED
CORRIDOR ROOM SIDE

901 Montgomery Street
Decorah, IA 52101

PHONE 563-382-2911
FAX 563-387-3102

WinnMed

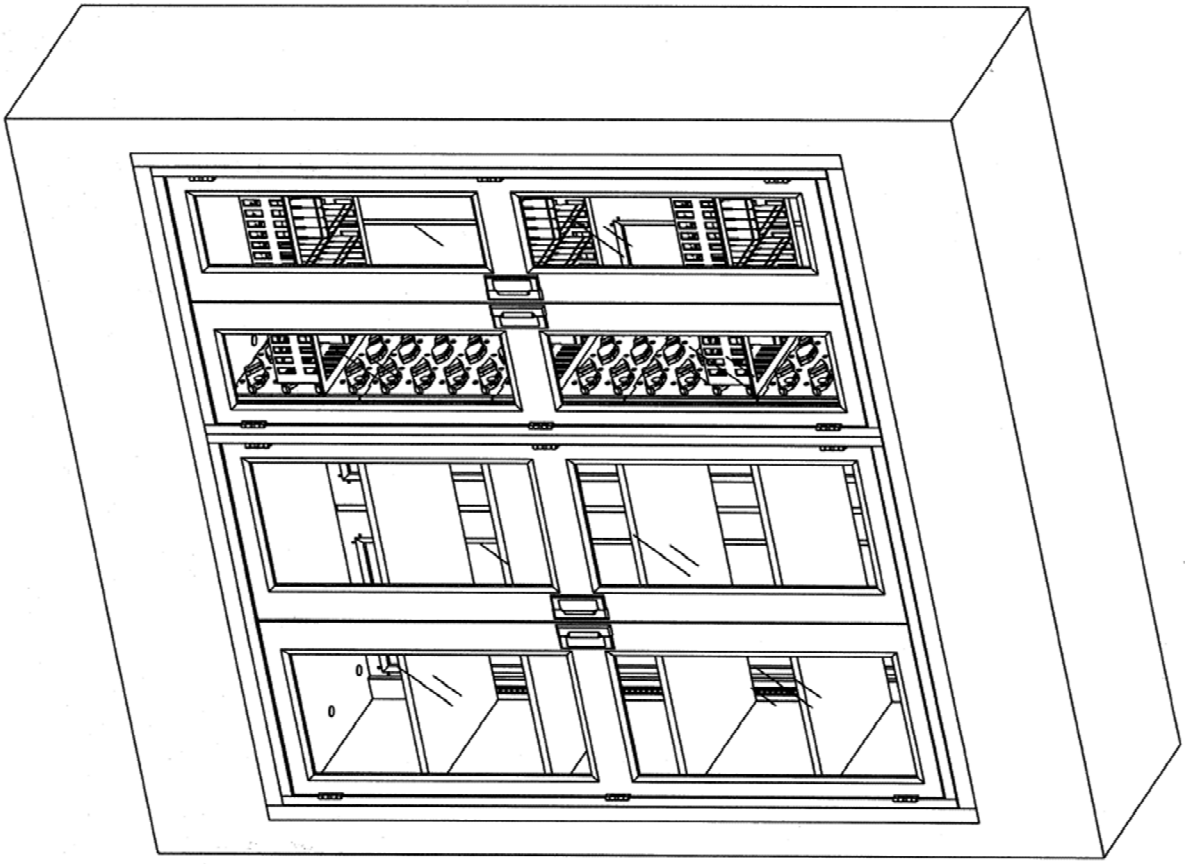

ISOMETRIC
S/S CABINETS
(8) SETS REQUIRED
OPERATING ROOM SIDE

901 Montgomery Street
Decorah, IA 52101

PHONE 563-382-2911
FAX 563-387-3102

WinnMed

WinnMed **Issue Date:** **3/6/2024**
Expansion and Renovation
Decorah, IA 52101
Furniture Specifications

CONTACT: Ben Stevens - CFO
PHONE NUMBER: 563-387-3109

ITEM NUMBER:	65

ITEM NAME:	BLANK		
ROOM NUMBER:		**QUANTITY:**	

SPECIFICATION INFORMATION	

MANUFACTURER:
MODEL #:
DIMENSIONS:
DESCRIPTION:

FURNITURE & EQUIPMENT IMAGE

901 Montgomery Street
Decorah, IA 52101

PHONE 563-382-2911
FAX 563-387-3102

WinnMed

WinnMed **Issue Date:** **3/6/2024**
Expansion and Renovation
Decorah, IA 52101
Furniture Specifications

CONTACT: Ben Stevens - CFO
PHONE NUMBER: 563-387-3109

ITEM NUMBER:	66

ITEM NAME:	Pass-Through Blanket & Fluid Warmer		
ROOM NUMBER:		**QUANTITY:**	

SPECIFICATION INFORMATION

MANUFACTURER: Steris
MODEL #: CB4721003001
DIMENSIONS: 24" W x 58 3/4" H x 18" D
DESCRIPTION: Pass-Through Blanket/Fluid warmer; glass doors; 120 VAC, 50/60 Hz, 1-Phase; 14 Amp, 1680 Watts; Stainless Steel Trim by others; Independent Heating Controls for both compartments LED display; 90-160 degree range with overtemperature visual/audible alarm; Slope Top; Sub Base; End Panels

FURNITURE & EQUIPMENT IMAGE

WinnMed

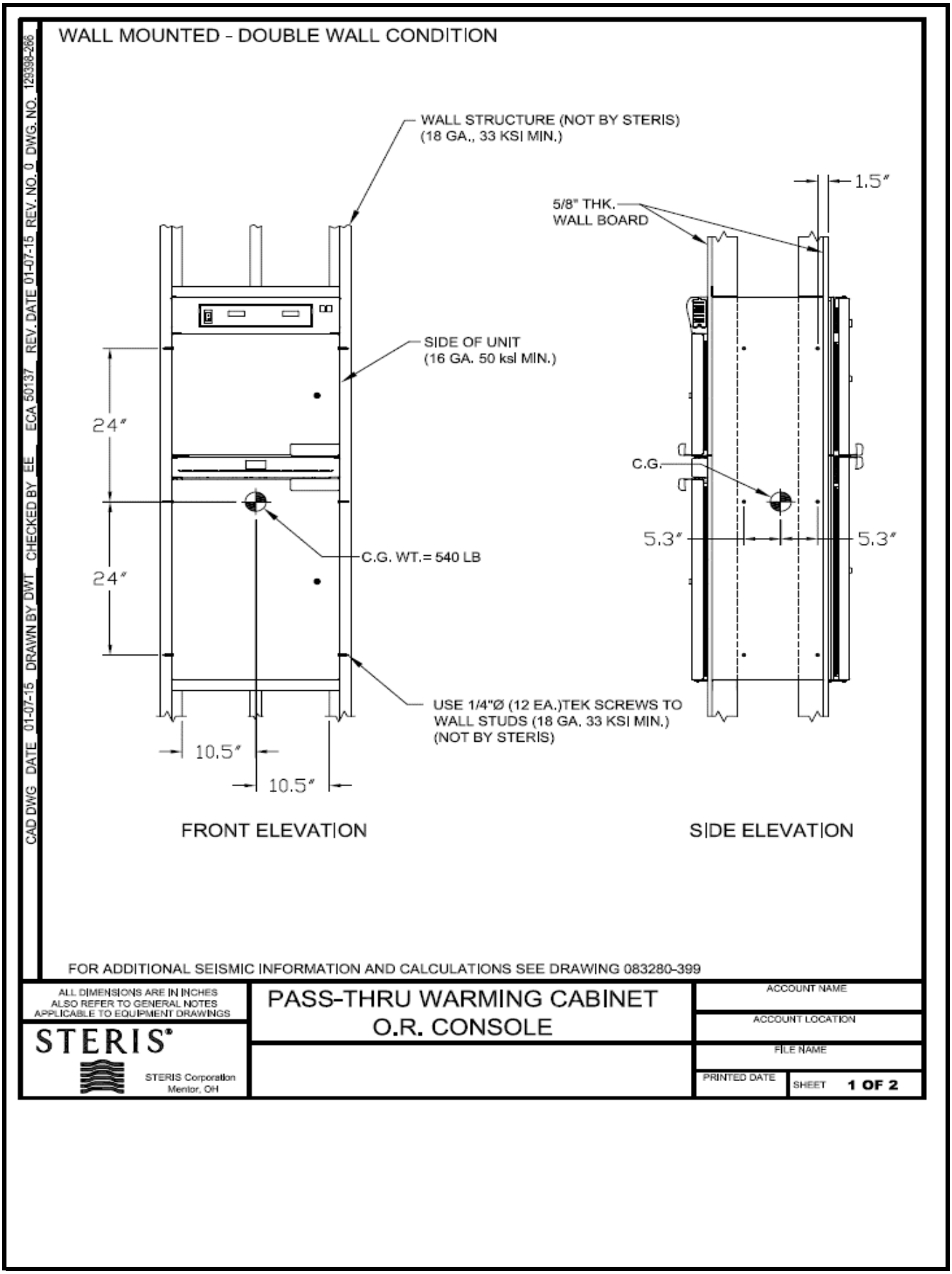

901 Montgomery Street
Decorah, IA 52101

PHONE 563-382-2911
FAX 563-387-3102

WinnMed

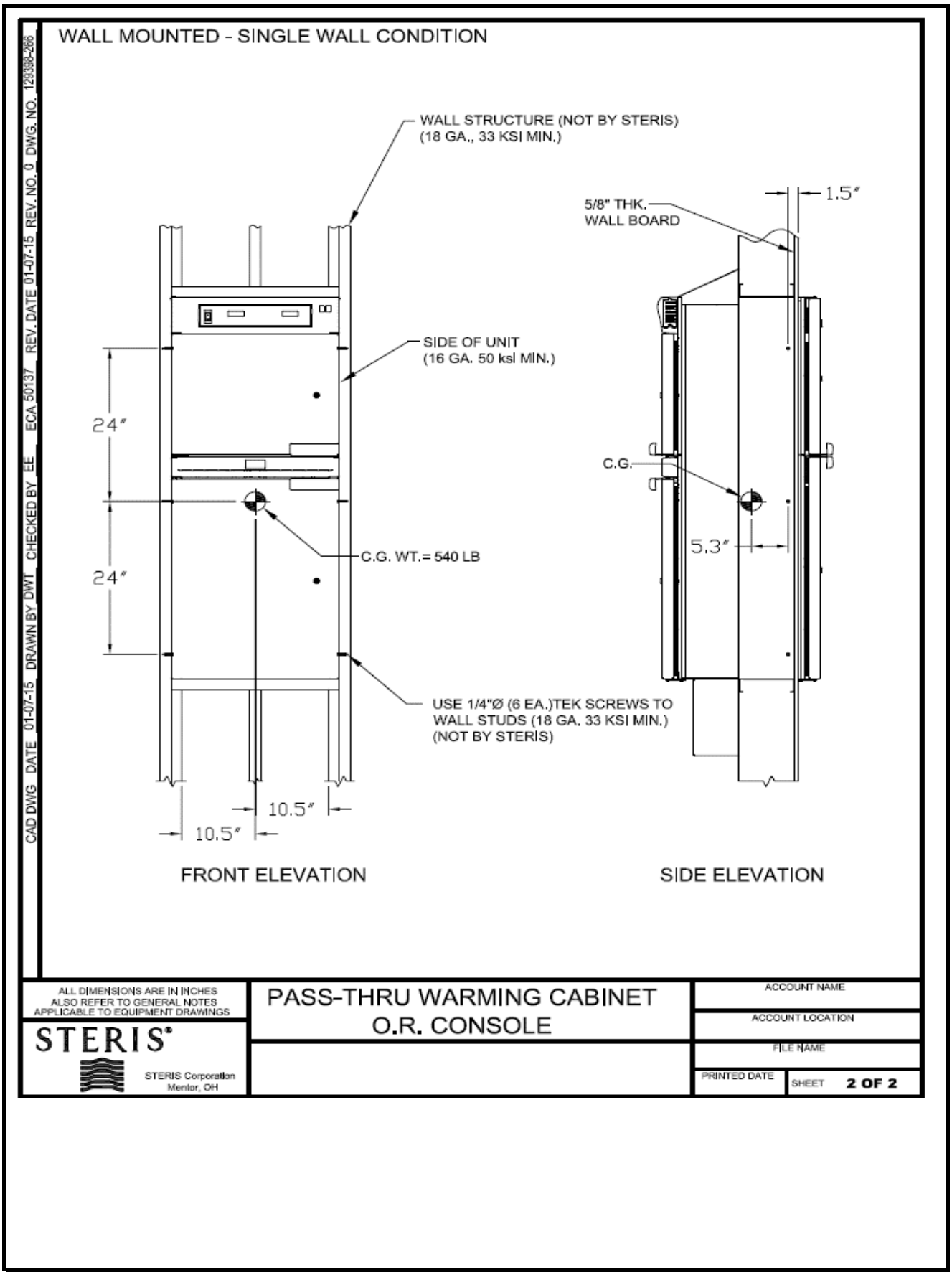

901 Montgomery Street
Decorah, IA 52101

PHONE 563-382-2911
FAX 563-387-3102

WinnMed

WinnMed **Issue Date:** **3/6/2024**
Expansion and Renovation
Decorah, IA 52101
Furniture Specifications

CONTACT: Ben Stevens - CFO
PHONE NUMBER: 563-387-3109

ITEM NUMBER:	67

ITEM NAME:	Surgery Scrub Sink		
ROOM NUMBER:		**QUANTITY:**	

SPECIFICATION INFORMATION

MANUFACTURER:	Steris
MODEL #:	CD122303
DIMENSIONS:	64" W x 27.5" D x 51.5" H
DESCRIPTION:	Surgery Scrub Sink; 2- Station; Infared Faucet System; Stainless Steel;

FURNITURE & EQUIPMENT IMAGE

WinnMed

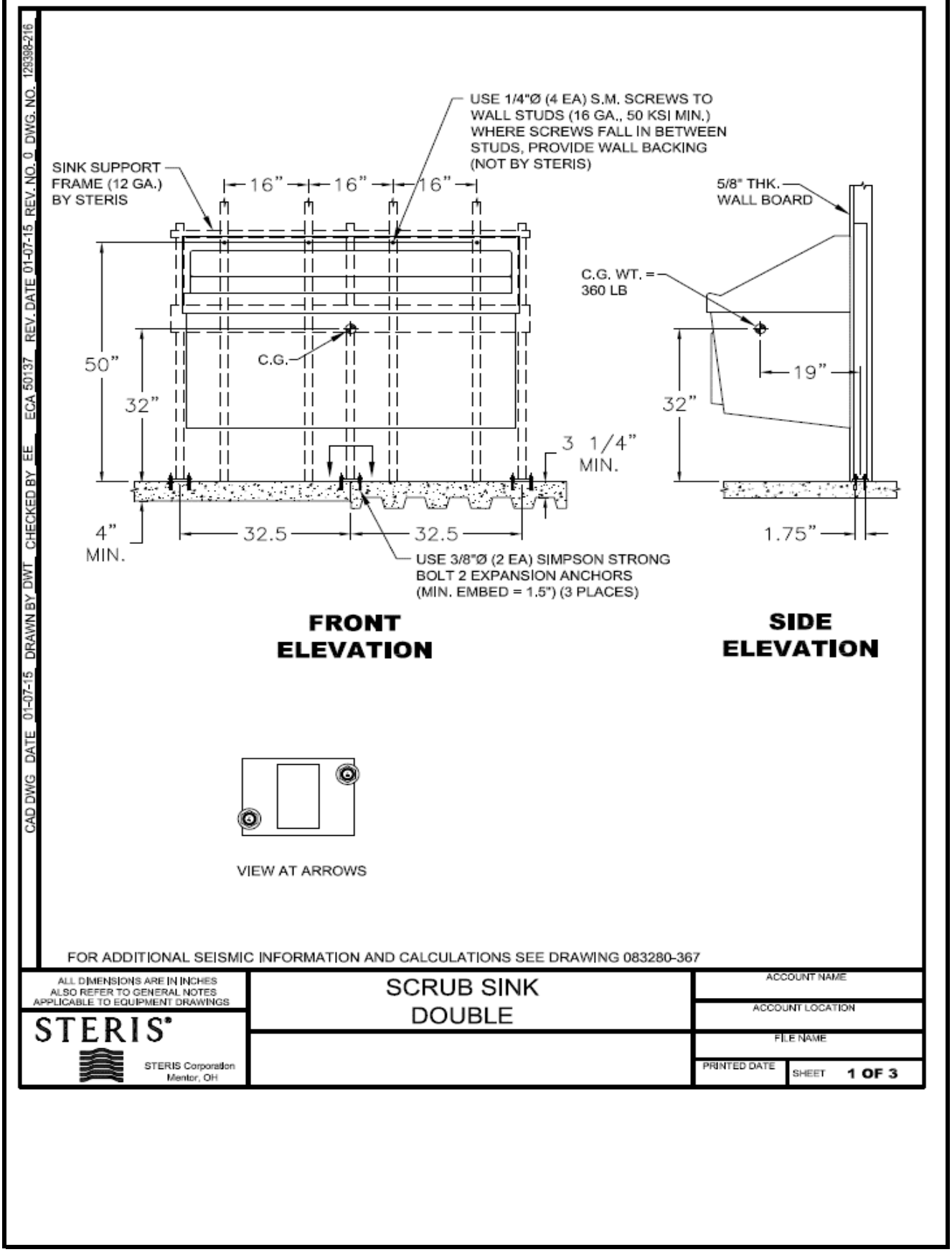

901 Montgomery Street
Decorah, IA 52101

PHONE 563-382-2911
FAX 563-387-3102

WinnMed

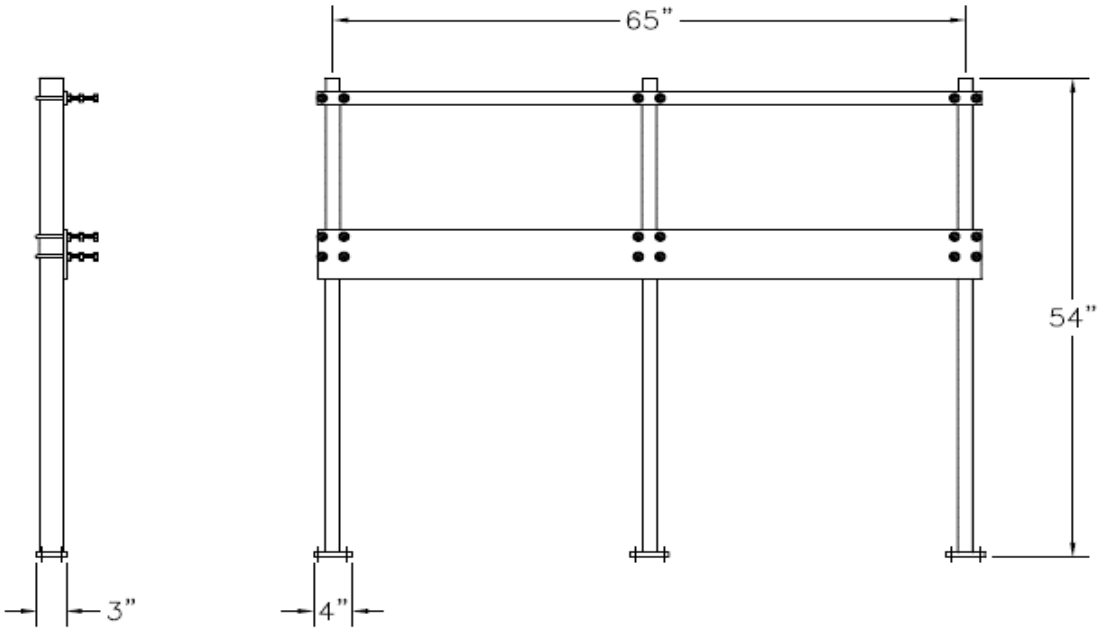

SINK SUPPORT FRAME
617106-851

CAD DWG DATE 01-07-15 DRAWN BY DWT CHECKED BY EE ECA 50137 REV. DATE 01-07-15 REV. NO. 0 DWG. NO. 129399-216

ALL DIMENSIONS ARE IN INCHES
ALSO REFER TO GENERAL NOTES
APPLICABLE TO EQUIPMENT DRAWINGS

STERIS®

STERIS Corporation
Mentor, OH

SCRUB SINK
DOUBLE

ACCOUNT NAME

ACCOUNT LOCATION

FILE NAME

PRINTED DATE

SHEET 2 OF 3

901 Montgomery Street
Decorah, IA 52101

PHONE 563-382-2911
FAX 563-387-3102

WinnMed

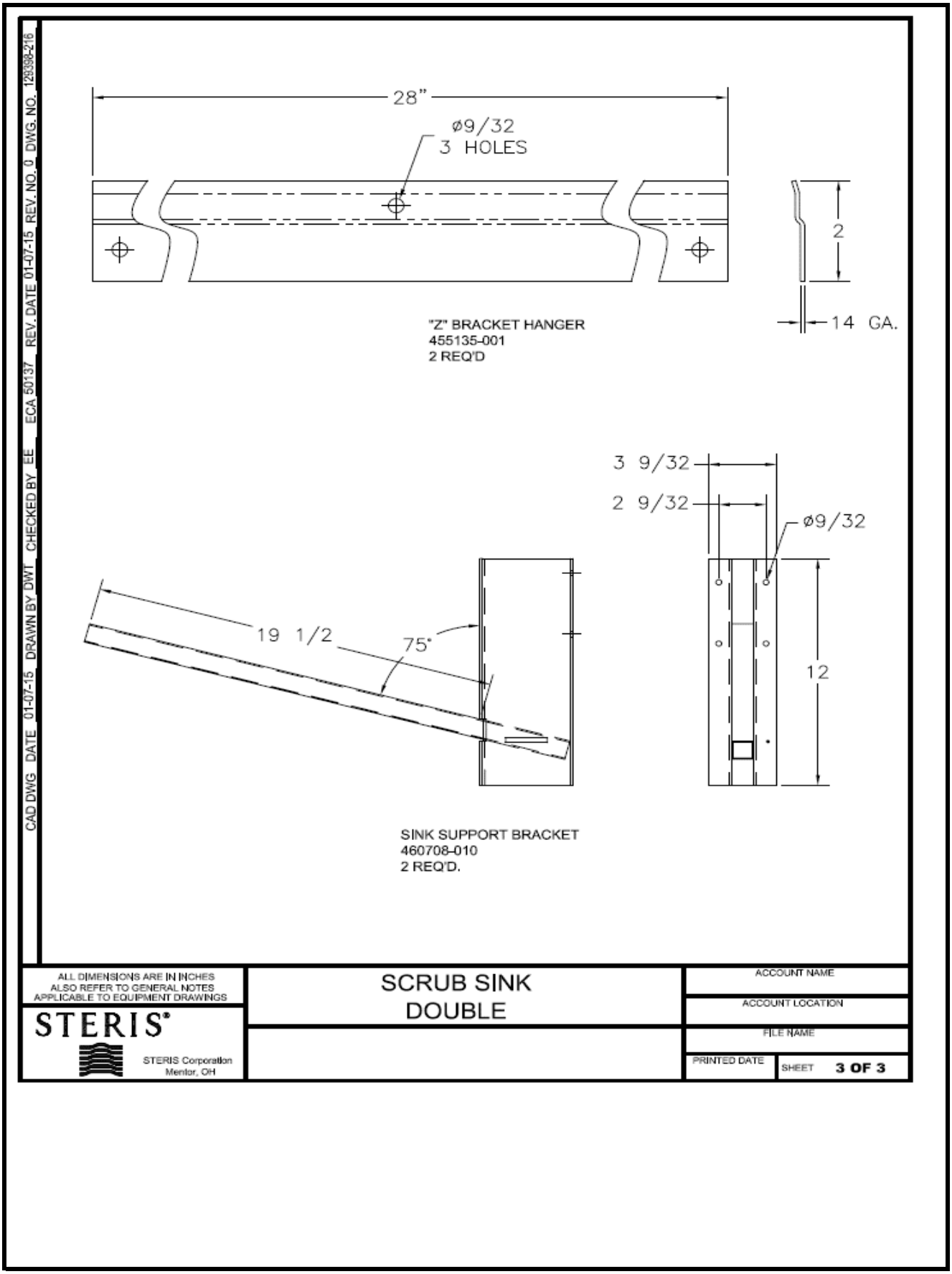

901 Montgomery Street
Decorah, IA 52101

PHONE 563-382-2911
FAX 563-387-3102

STERIS

AMSCO® FLEXMATIC® SCRUB STATION

APPLICATION

The AMSCO Flexmatic Scrub Station is used for preoperative surgical scrubbing of hands and arms. Water temperature is automatically maintained by a thermostatically controlled mixing valve. Options include an infra-red water sensor, which detects when hands are under the faucet and turns water on and off automatically, or a digital timer, which displays time elapsed from start of water flow, an eye wash fixture, which extends faucet use to an eye wash station and a laminar flow faucet head, which delivers a constant stream of water.

DESCRIPTION

The AMSCO Flexmatic Scrub Station is of all stainless-steel construction. It consists of a washing compartment, controls, and mounting devices. The Flexmatic is available with either one, two, or three scrub stations (as specified).

STERIS furnishes all components necessary to obtain a complete working unit, ready for (but not including) installation and connection to building utility service lines. Installation may be purchased separately.

Single Station with Infra-Red Water Valve Sensor shown.
(Typical only - some details may vary.)

FEATURES

Washing compartment is continuous even if a multiple-station unit is specified. Each station of the washing compartment includes a centrally located gooseneck spout assembly.

The spout assembly with rose spray head provides carefully controlled water-spray coverage. The rose spray head is removable for cleaning. The bottom of the compartment is formed to reduce splashing and to flush soil away from the user. The underside of the compartment is sound-deadened.

The compartment, including backsplash, is welded 16 gauge stainless steel. It is 19-1/4" (489 mm) deep x 10-1/2" (267 mm) high with coved inside corners. The width is 29, 61 or 93" (737, 1549 or 2362 mm) depending on number of stations selected. The backsplash extends the full width of the unit.

Each station (except unit with infra-red sensor) has one **knee-operated control** to start and stop water flow. Pressing then releasing the knee panel labeled WATER opens a water valve. Closing the water valve is accomplished by again pressing then releasing the knee panel.

Thermostatically controlled mixing valve provides selection of water temperature up to 115°F (46°C) at each station. The mixing valve quickly compensates for temperature fluctuations induced by water temperature and pressure changes. If the water temperature rises above 115°F (46°C), an anti-scald feature automatically shuts off the flow of hot water.The mixing valve also features heavy, cast-brass construction, and chromium plated operating handle.

Mounting brackets are furnished for securing the station to a wall.

The Selections Checked Below Apply To This Equipment

STATION SIZES - W x D x H
- ☐ One Station - 32 x 27-9/32 x 51-1/2"
- ☐ Two Station - 64 x 27-9/32 x 51-1/2"
- ☐ Three Station - 96 x 27-9/32 x 51-1/2"

OPTIONS
- ☐ Infra-Red Water Control Sensor
- ☐ Digital Timer on Backsplash
- ☐ Eye Wash Fixture
- ☐ Laminar Flow Faucet Head

FIELD UPGRADEABLE OPTION
- ☐ Knee Operated Internal Soap Dispenser (Special Sales Quotation [SSQ] required to order)

ACCESSORIES
- ☐ Soap Dispenser – Quantity ____
- ☐ Divider Screen – Quantity ____
- ☐ Chair Carrier
  - ☐ for use with Single Sink
  - ☐ for use with Double Sink
  - ☐ for use with Triple Sink

Item _____
Location(s)_____
_____

SD240 (01/01/19)

901 Montgomery Street
Decorah, IA 52101

PHONE 563-382-2911
FAX 563-387-3102

STANDARDS

- **FDA Good Manufacturing Practices Regulations 21CFR820,** for Medical Devices.
- **Underwriters Laboratories (UL) Standard 61010-1, 2nd Edition: 2004,** as certified by ETL Testing Laboratories, Inc.
- **Standard CSA-C22.2, No. 61010-1: 2004, Issued: 2004/07/12, 2nd Edition,** as certified by ETL Testing Laboratories, Inc.

CONSTRUCTION

Plumbing hardware includes chromium-plated brass strainer with gasket, tailpiece, and nut. The plumbing and mounting brackets are concealed by 18 gauge stainless-steel skirt assembly. Exposed surfaces are glass beaded to a matte finish.

The washing compartment is constructed of 16 gauge stainless steel; exposed surfaces are glass beaded to a matte finish.

Stainless steel conforms to ASTM Specification A240 for type 201 and 304.

OPTIONAL FEATURES

Infra-Red Sensor. Sensor can be provided to turn water on and off automatically when hands are under the faucet.

Digital Timer. Each station can be equipped with a timer that begins timing when water flow starts. Timer continues to run until the water flow stops. Several seconds after stopping, the display automatically switches off.

Eye Wash Fixture. This attachment extends faucet use to an eye wash station.

NOTE: Faucet-mounted eye wash stations (regardless of manufacturer) require two motions to operate (turn water on, pull knob) and thus do not meet the provisions of ANSI Z358.1-2004.

Laminar Flow Faucet Head. Each station can be equipped with an alternative laminar flow faucet head. Laminar flow faucet head delivers a consistent (non-rose spray) stream of water that has a nonsplash characteristic.

FIELD UPGRADEABLE OPTION

Knee Operated Internal Soap Dispenser. Each time the knee panel labeled SOAP is pressed then released, approximately 2 cc of soap is pumped out of the soap dispenser spout. A shelf is provided under the washing compartment for a 1-gallon (3.78-liter) container of soap. These knee panels can be either opened or removed when components under washing compartment have to be serviced. (SSQ required to order.)

ACCESSORIES

Foot operated soap dispenser can be mounted directly to the wall above each station, allowing for easy access to change out the container when empty. Each dispenser comes with a one quart container of Bactoshield® Surgical Hand Scrub which screws directly to the dispenser. Each time the foot pedal is pressed, approximately 1.5 – 2 cc of detergent is pumped out of the soap dispenser spout. A special air intake feature prevents dripping after use. The unique valving prevents air from the foot pedal from coming in contact with the soap.

Divider Screen (constructed of Plexiglas®) is available to divide two- and three-station units for reducing splash and aerosol contamination between adjacent stations. One screen is recommended for a two-station unit, and two screens for a three-station unit.[1]

Chair Carrier supports the hanging weight of a scrub sink if the wall is not properly reinforced.

PREVENTIVE MAINTENANCE

A global network of skilled service specialists can provide periodic inspections and adjustments to help ensure low-cost peak performance. STERIS representatives can provide information regarding annual maintenance agreements.

ENGINEERING DATA

Shipping Weight:

- One station – 175 lbs (80 kg)
- Two stations – 295 lbs (134 kg)
- Three stations – 420 lbs (191 kg)

NOTES

1. Pipe sizes shown indicate terminal outlets only. Building service lines (not provided by STERIS) must supply the specified pressures and flow rates.
2. If the wall is not properly reinforced to support the hanging weight of a scrub sink, STERIS recommends the use of chair carriers to ensure proper sink support.

UTILITY REQUIREMENTS

Cold Water
1/2" NPT; 20-50 psig (138-345 kPa) dynamic.

Hot Water
1/2" NPT; 120-140°F (49-60°C),
20-50 psig (138-345 kPa) static.

Drain
1-1/2" OD.

Electricity
Single, double, or triple sink with manual timer/clock, infrared water valve sensor and/or infrared wash sensor options (80VA transformer):

120V, 1.2A, 50/60 Hz, 0.144KW, 1Ø

220-240V, 0.6A, 50/60 Hz, 0.144KW, 1Ø

Triple sink with timer/clock, infrared water valve sensor and infrared wash sensor options (130VA transformer):

120V, 1.6A, 50/60 Hz, 0.192KW, 1Ø

220-240V, 0.8A, 50/60 Hz, 0.192KW, 1Ø

1. Plexiglas® is a registered trademark of Altuglas International

901 Montgomery Street
Decorah, IA 52101

PHONE 563-382-2911
FAX 563-387-3102

WinnMed

WinnMed **Issue Date:** **3/6/2024**
Expansion and Renovation
Decorah, IA 52101
Furniture Specifications

CONTACT: Ben Stevens - CFO
PHONE NUMBER: 563-387-3109

ITEM NUMBER:	68

ITEM NAME:	BLANK		
ROOM NUMBER:		**QUANTITY:**	

SPECIFICATION INFORMATION	

MANUFACTURER:
MODEL #:
DIMENSIONS:
DESCRIPTION:

FURNITURE & EQUIPMENT IMAGE

901 Montgomery Street
Decorah, IA 52101

PHONE 563-382-2911
FAX 563-387-3102

WinnMed

WinnMed **Issue Date:** **3/6/2024**
Expansion and Renovation
Decorah, IA 52101
Furniture Specifications

CONTACT: Ben Stevens - CFO
PHONE NUMBER: 563-387-3109

ITEM NUMBER:	69

ITEM NAME:	BLANK		
ROOM NUMBER:		**QUANTITY:**	

SPECIFICATION INFORMATION	

MANUFACTURER:
MODEL #:
DIMENSIONS:
DESCRIPTION:

FURNITURE & EQUIPMENT IMAGE

901 Montgomery Street
Decorah, IA 52101

PHONE 563-382-2911
FAX 563-387-3102

WinnMed

WinnMed **Issue Date:** **3/6/2024**
Expansion and Renovation
Decorah, IA 52101
Furniture Specifications

CONTACT: Ben Stevens - CFO
PHONE NUMBER: 563-387-3109

ITEM NUMBER:	70

ITEM NAME:	Ceiling Mounted Patient Lift		
ROOM NUMBER:		**QUANTITY:**	

SPECIFICATION INFORMATION

MANUFACTURER: ARJO
MODEL #: Max Sky 2
DIMENSIONS:
DESCRIPTION: Ceiling Mounted Patient Lift; 600 lbs capacity

FURNITURE & EQUIPMENT IMAGE

901 Montgomery Street
Decorah, IA 52101

PHONE 563-382-2911
FAX 563-387-3102

WinnMed

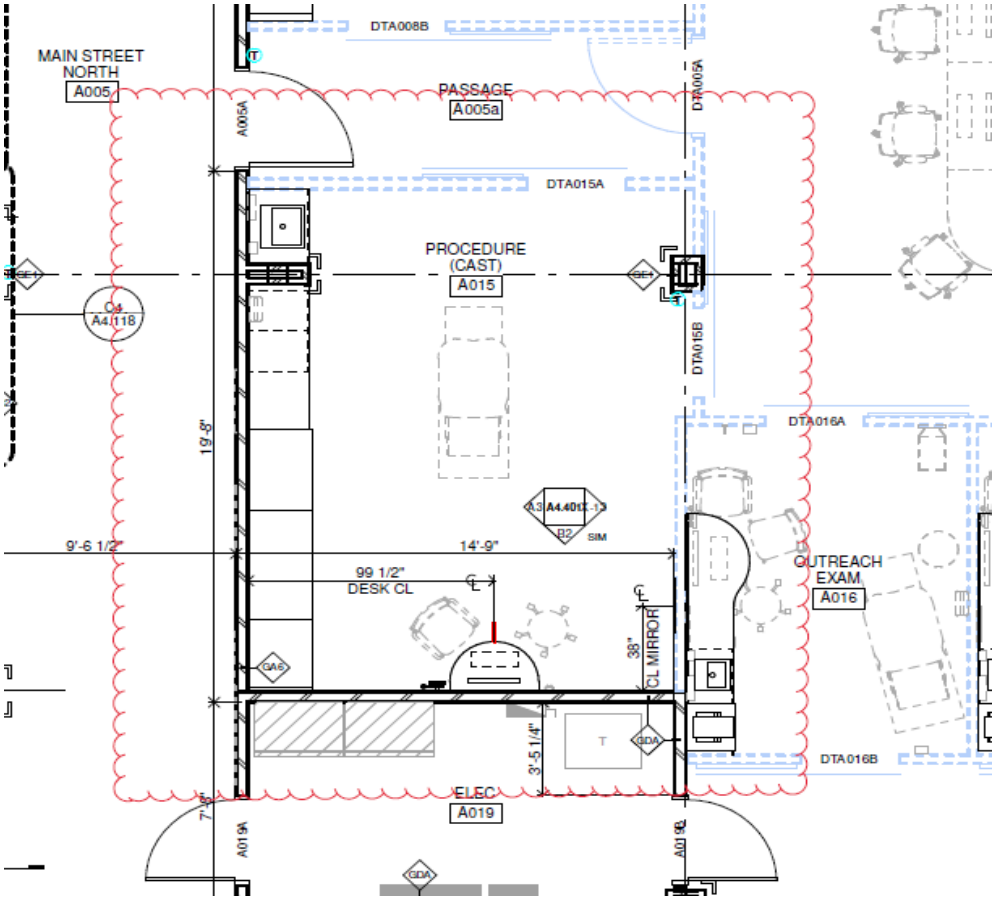

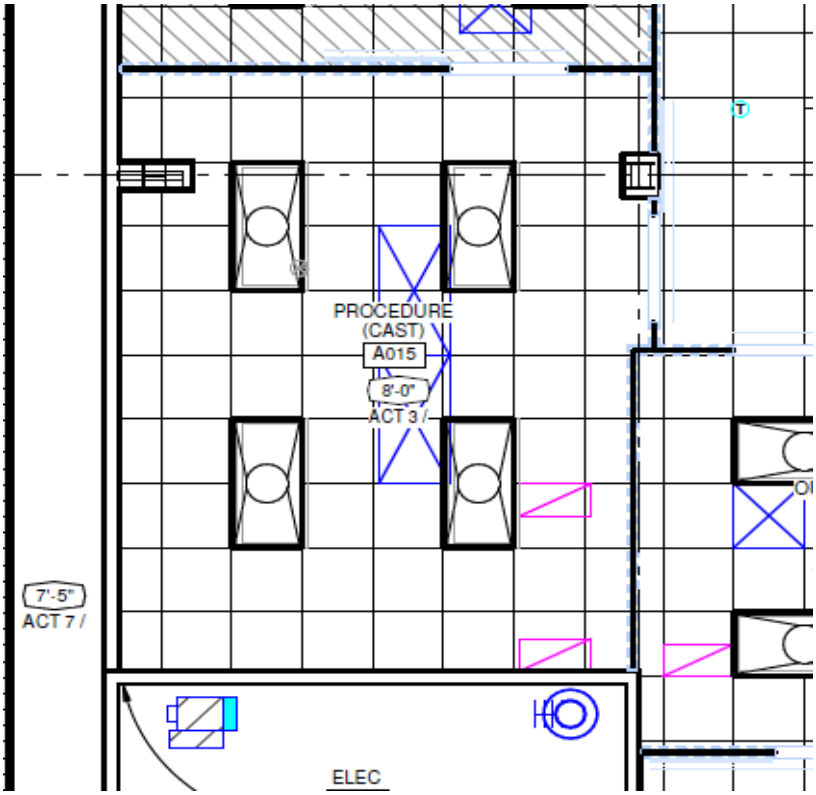

901 Montgomery Street
Decorah, IA 52101

PHONE 563-382-2911
FAX 563-387-3102

WinnMed

IMPORTANT NOTES

1. The ceiling minimum structure capacity must be able to support the load specified on the installation drawing.
2. Electrical power source outlet already available by the facility at a maximum distance of 3 meters from charging station.
3. Any obstructions such as vents, pipes, lights and sprinklers that could possibly be in the path of the ceiling lifts to be removed or relocated by the facility prior to installation.
4. Modifications of door headers by the facility.
5. Arjo reserves the right to slightly modify the track layout if necessary.
6. See the "Agreed Conditions for the Installation of Ceiling Lifts" document included with this quote for important installation details.
7. Arjo will not be held responsible for any damages, inconvenience, resulting from hitting any non visible conduits during our installation process.
8. Signed drawings are required prior to ordering and installation of ceiling lifts. This signature of each drawings confirms agreement of all the conditions listed above.

MY SIGNATURE BELOW VERIFIES THAT I HAVE:
Reviewed all 5 pages, with a total quantity of 1 rooms, for the approbation of layout for each room and the approbation of structure for each room. I verify that the answers below are accurate to the best of my knowledge and I understand that the quote produced is dependent upon the conditions below as well as this full drawing set.

- Is a load dock available? **YES** NO
- Can facility accept shipment and store until install begins? **YES** NO
- Will a drop trailer be needed? YES **NO**
- Is parking available on site? Is there a fee involved? **YES** NO
- Are there any installation time frame limitations? What are they? **YES** NO
- Is a level of infectious control required? **YES** NO
  If YES, then what level _____

CUSTOMER APPROVAL: _____ DATE: _____

Legend

- Track
- Track with service zone (ServZone)
- Track with wall fixation
- Track with gate
- Track with gate reverse
- Wall post
- Wall bracket
- Wall post side
- Track with T-junction
- X-Y Trolley (Suspended)
- X-Y Trolley (Embedded)
- Turntable (Auto/Manual)
- Exchanger
- Sprinkler
- Smoke detector
- Electrical outlet
- (*) Ceiling light
- Ceiling vent
- Access trap required
- Existing access trap
- (*) Additional items
- (*) X-Y alim. type + options
- (*) Motor/charger location
- Curtain track
- IV track
- Swivel pole

(*) Symbol may vary depending of equipment type

REVISION(S)	DATE(S) (D-M-Y)

INSTALLATION DRAWING

WINNESHIEK MEDICAL CENTER

DISTRIBUTOR : ARJO

REPRESENTATIVE : CHRIS TOREN

DATE (DD-MMM-YYYY) : 13-MAR-2024

REFERENCE # : QC-03132403

PAGE : 1 / 5

arjo

PHONE 563-382-2911
FAX 563-387-3102

901 Montgomery Street
Decorah, IA 52101

WinnMed

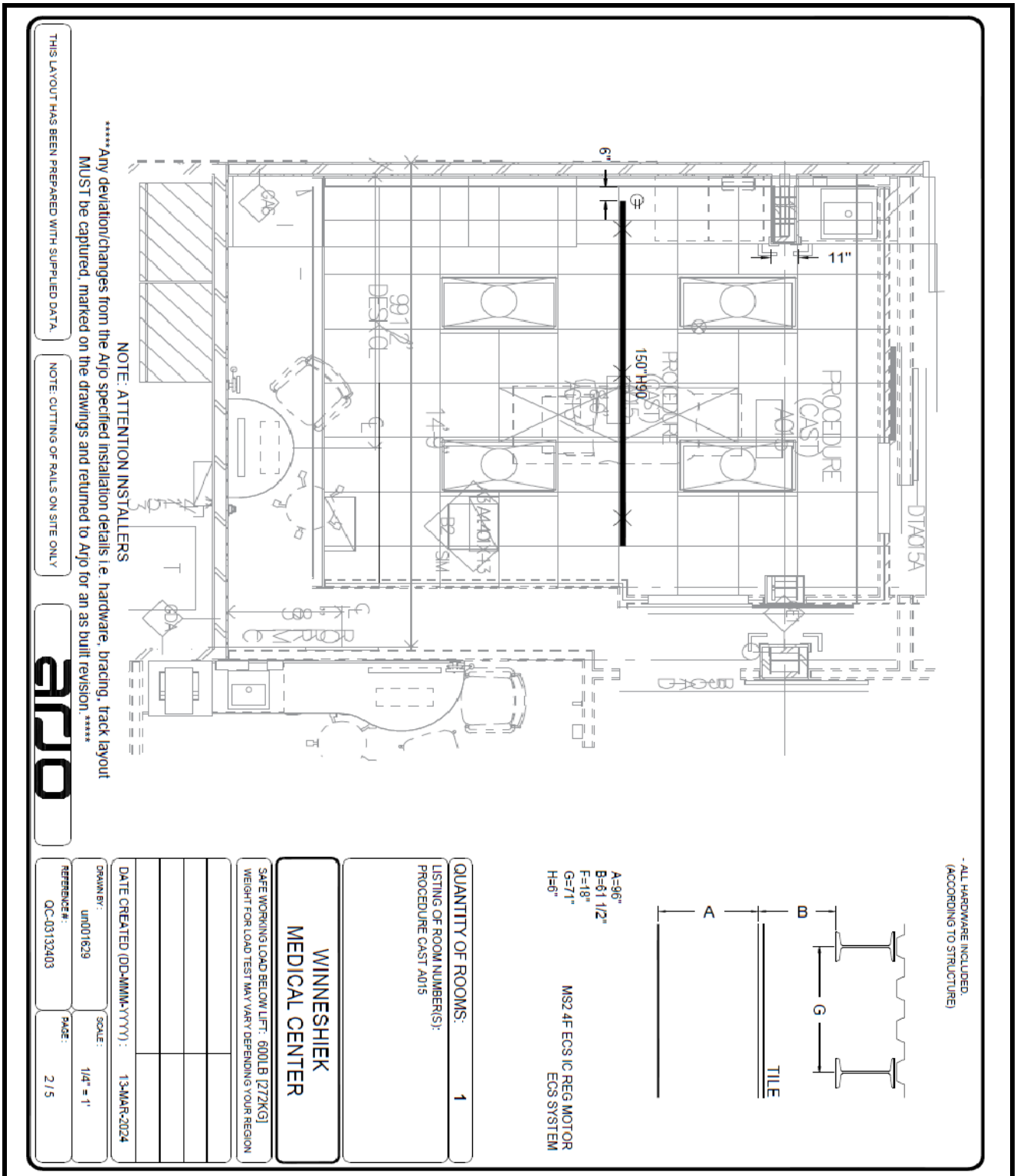

901 Montgomery Street
Decorah, IA 52101

PHONE 563-382-2911
FAX 563-387-3102

WinnMed

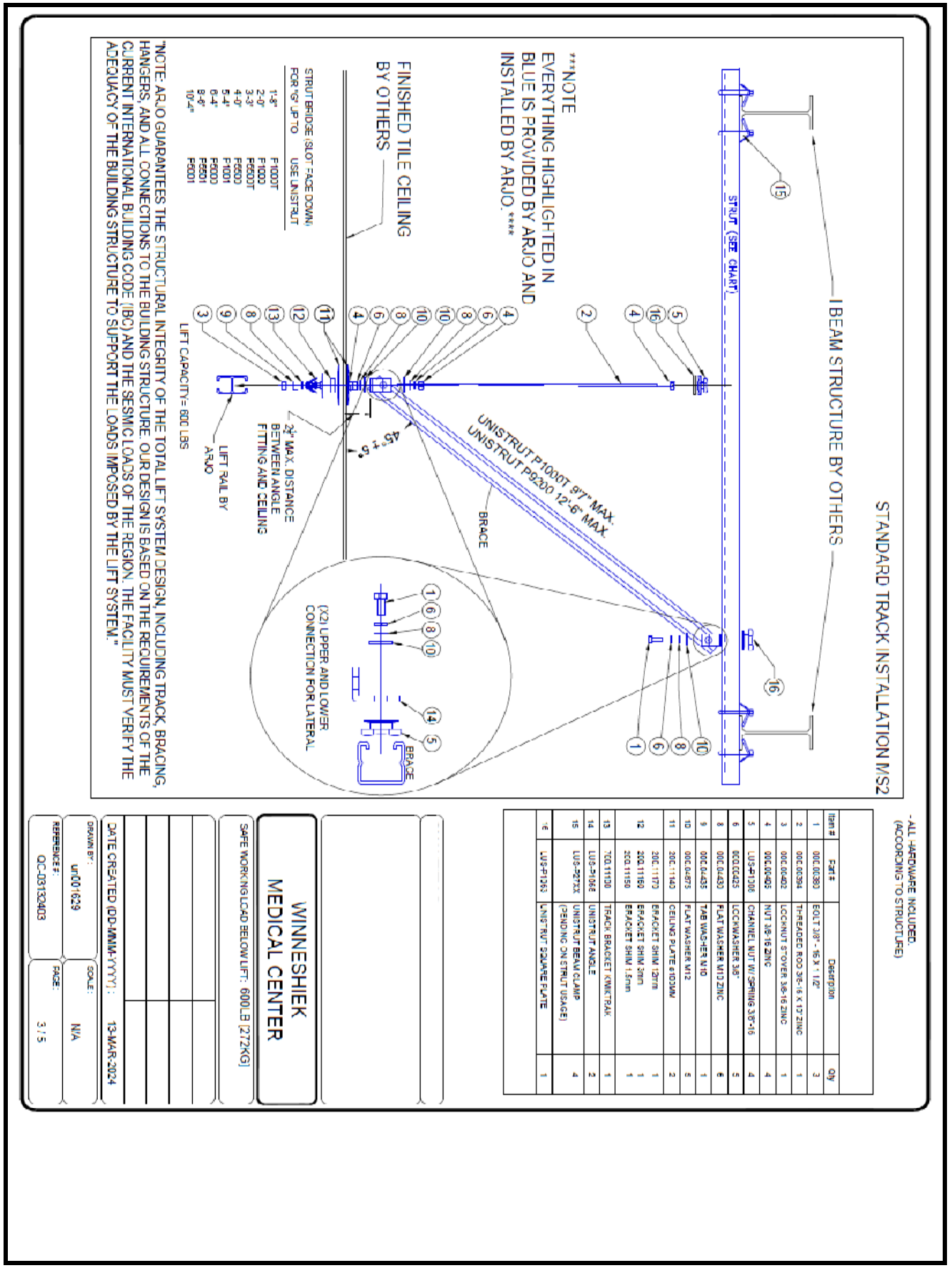

901 Montgomery Street
Decorah, IA 52101

PHONE 563-382-2911
FAX 563-387-3102

WinnMed

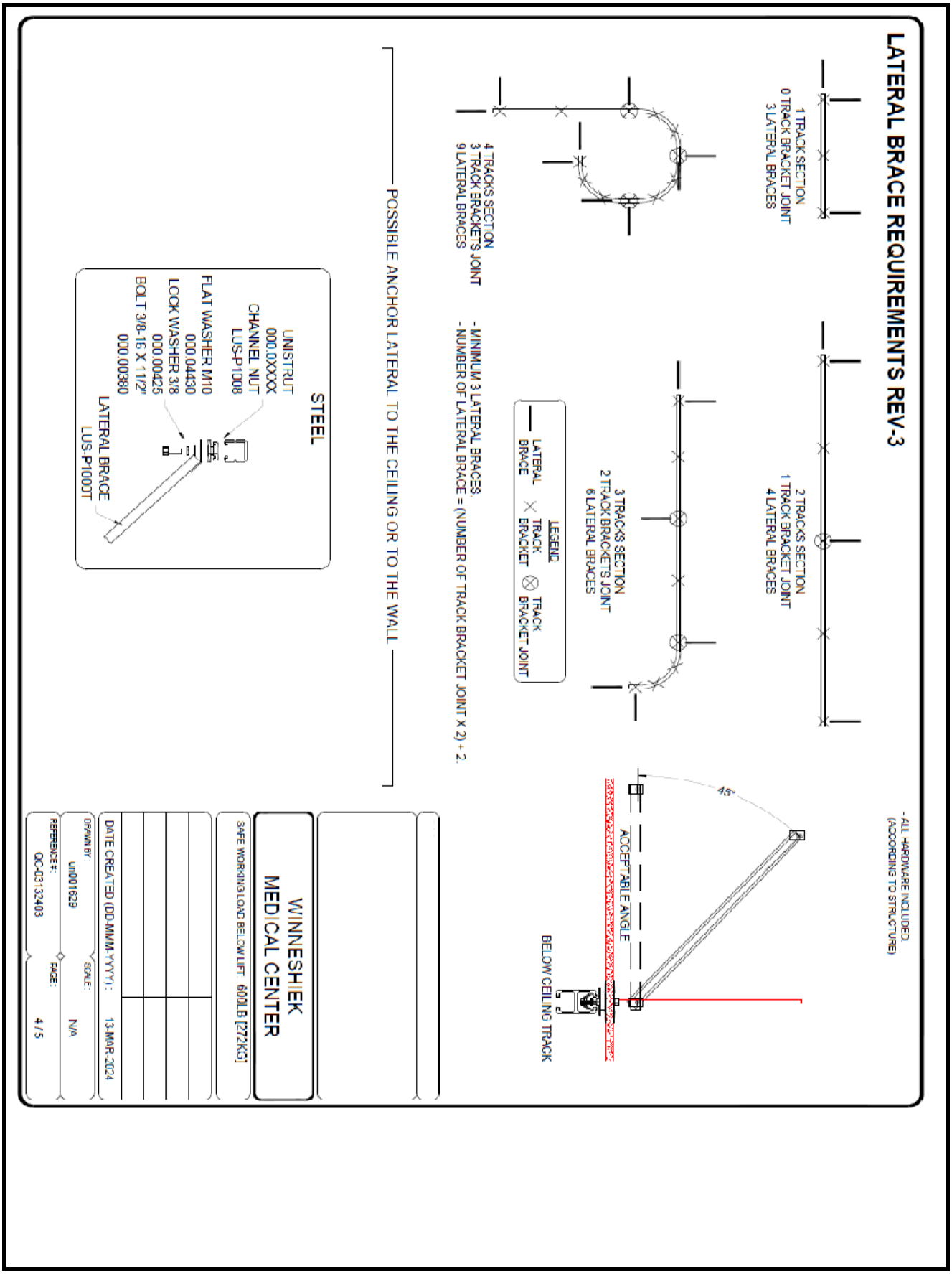

901 Montgomery Street
Decorah, IA 52101

PHONE 563-382-2911
FAX 563-387-3102

WinnMed

BRIDGE DETAIL

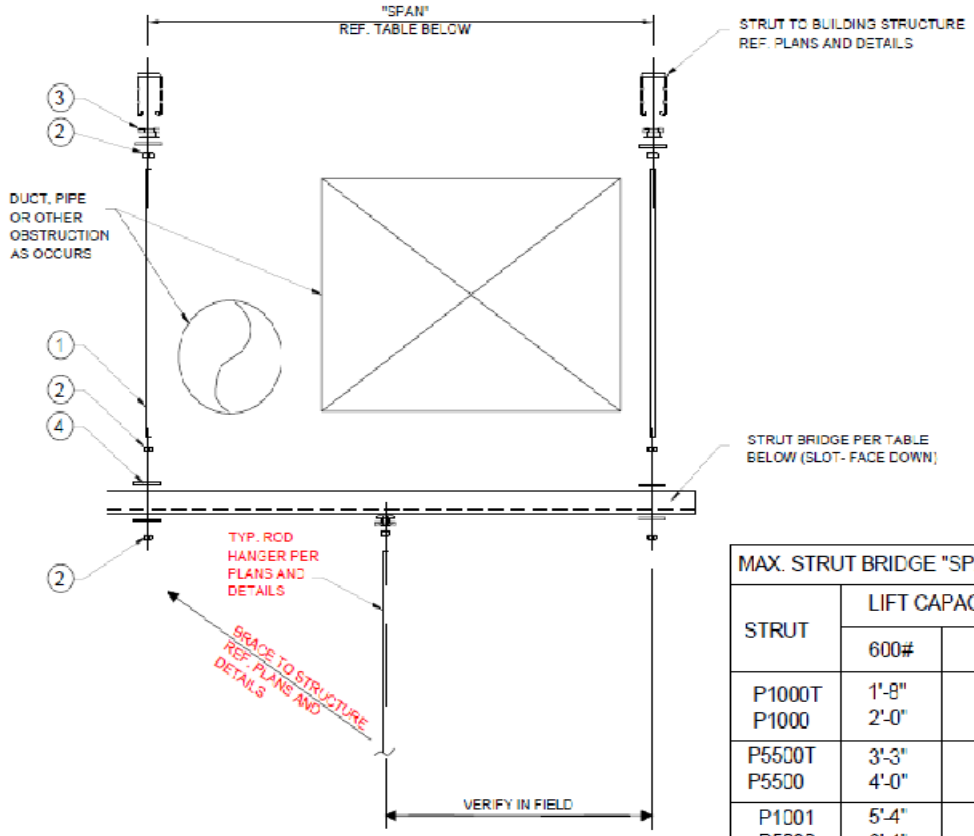

- ALL HARDWARE INCLUDED.
(ACCORDING TO STRUCTURE)

Item #	Part #	Description	Qty
1	000.00394	THREADED ROD 3/8-16 X 10' ZINC	2
2	000.00405	NUT 3/8-16 ZINC	6
3	LUS-P3008	CHANNEL NUT 3/8	2
4	LUS-P1083	SQUARE PLATE 3/8"	6

MAX. STRUT BRIDGE "SPAN"		
STRUT	LIFT CAPACITY	
	600#	
P1000T P1000	1'-8" 2'-0"	
P5500T P5500	3'-3" 4'-0"	
P1001 P5000	5'-4" 6'-4"	
P5501 P5001	8'-6" 10'-4"	

"NOTE: ARJO GUARANTEES THE STRUCTURAL INTEGRITY OF THE TOTAL LIFT SYSTEM DESIGN, INCLUDING TRACK, BRACING, HANGERS, AND ALL CONNECTIONS TO THE BUILDING STRUCTURE. OUR DESIGN IS BASED ON THE REQUIREMENTS OF THE CURRENT INTERNATIONAL BUILDING CODE (IBC) AND THE SESMIC LOADS OF THE REGION. THE FACILITY MUST VERIFY THE ADEQUACY OF THE BUILDING STRUCTURE TO SUPPORT THE LOADS IMPOSED BY THE LIFT SYSTEM."

WINNESHIEK
MEDICAL CENTER

SAFE WORKING LOAD BELOW LIFT: 600LB [272KG]

DATE CREATED (DD-MMM-YYYY) : 13-MAR-2024

DRAWN BY :	SCALE :
un001629	N/A
REFERENCE # :	PAGE :
QC-03132403	5 / 5

PHONE 563-382-2911
FAX 563-387-3102

901 Montgomery Street
Decorah, IA 52101

WinnMed

WinnMed **Issue Date:** **3/6/2024**
Expansion and Renovation
Decorah, IA 52101
Furniture Specifications

CONTACT: Ben Stevens - CFO
PHONE NUMBER: 563-387-3109

ITEM NUMBER:	71

ITEM NAME:	BLANK		
ROOM NUMBER:		**QUANTITY:**	

SPECIFICATION INFORMATION	

MANUFACTURER:
MODEL #:
DIMENSIONS:
DESCRIPTION:

FURNITURE & EQUIPMENT IMAGE

WinnMed

WinnMed **Issue Date:** **3/6/2024**
Expansion and Renovation
Decorah, IA 52101
Furniture Specifications

CONTACT: Ben Stevens - CFO
PHONE NUMBER: 563-387-3109

ITEM NUMBER:	72

ITEM NAME:	BLANK		
ROOM NUMBER:		**QUANTITY:**	

SPECIFICATION INFORMATION	

MANUFACTURER:
MODEL #:
DIMENSIONS:
DESCRIPTION:

FURNITURE & EQUIPMENT IMAGE

901 Montgomery Street
Decorah, IA 52101

PHONE 563-382-2911
FAX 563-387-3102

WinnMed

WinnMed **Issue Date:** **3/6/2024**
Expansion and Renovation
Decorah, IA 52101
Furniture Specifications

CONTACT: Ben Stevens - CFO
PHONE NUMBER: 563-387-3109

ITEM NUMBER:	73

ITEM NAME:	OB Headwall		
ROOM NUMBER:		**QUANTITY:**	

SPECIFICATION INFORMATION

MANUFACTURER: AMICO
MODEL #: NuLook Manifold System
DIMENSIONS: 111.5" x 88" H x 5" D
DESCRIPTION: OB Headwall system with Backlit Accent panel, built in electrical (qty 14 emerg. outlets; qty 10 normal power outlets)/data (qty 3 outlets)/medical gas connections (qty 2 O2; qty 2 Med Air; qty 2 Vacuum); bed bumpers

FURNITURE & EQUIPMENT IMAGE

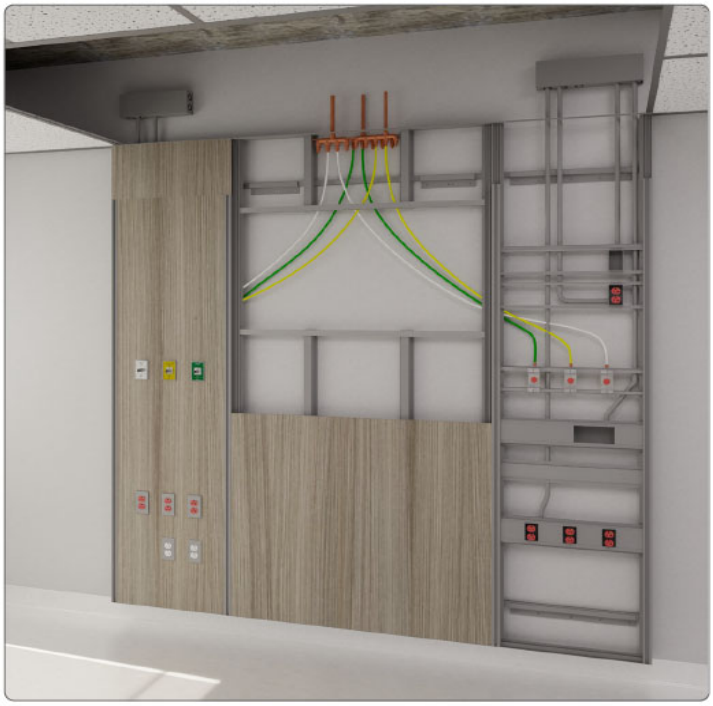

WinnMed

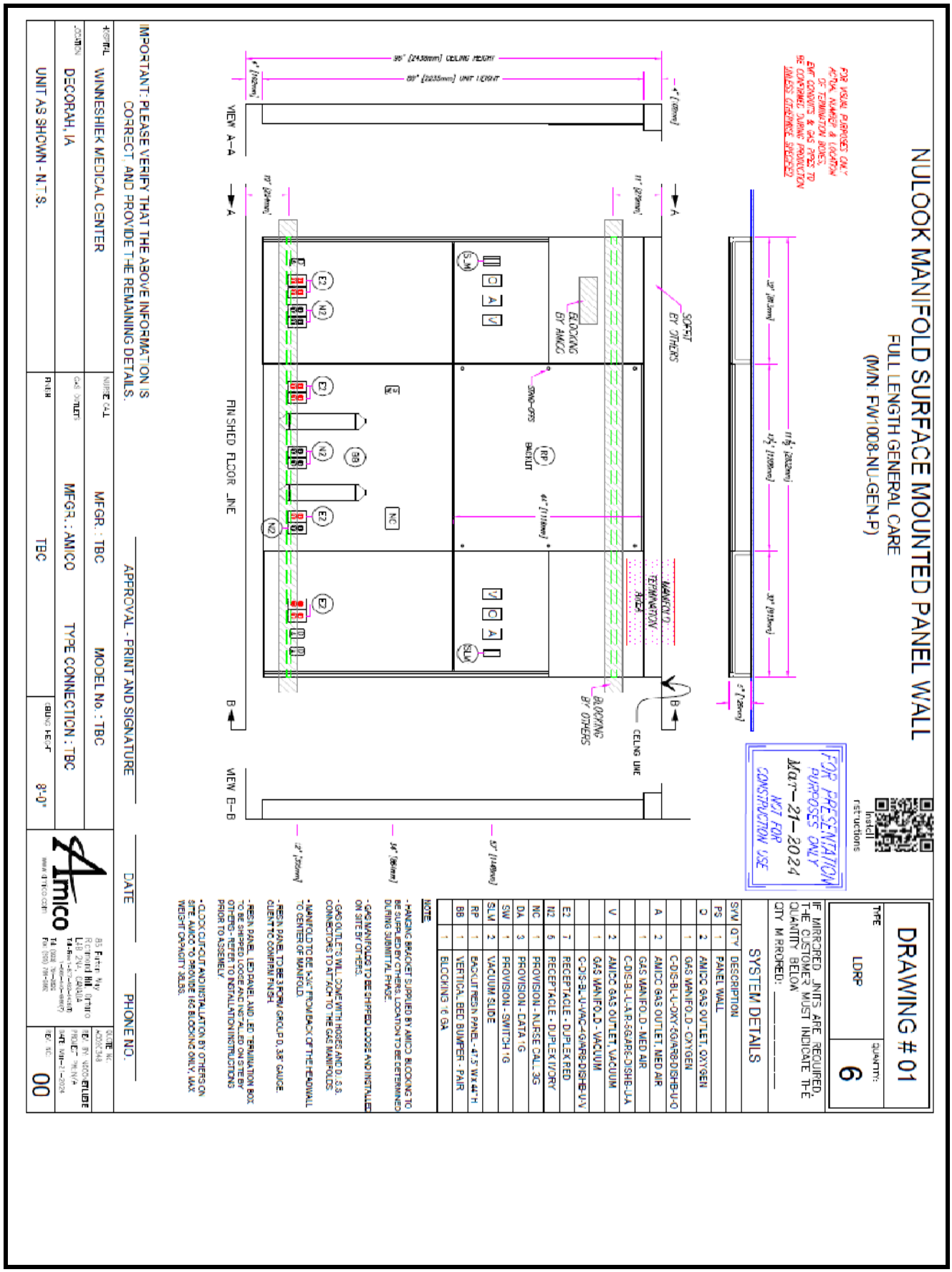

901 Montgomery Street
Decorah, IA 52101

PHONE 563-382-2911
FAX 563-387-3102